Connection Plan 1:

Operation of a Consumer at the Inverter with Mains Priority Control:

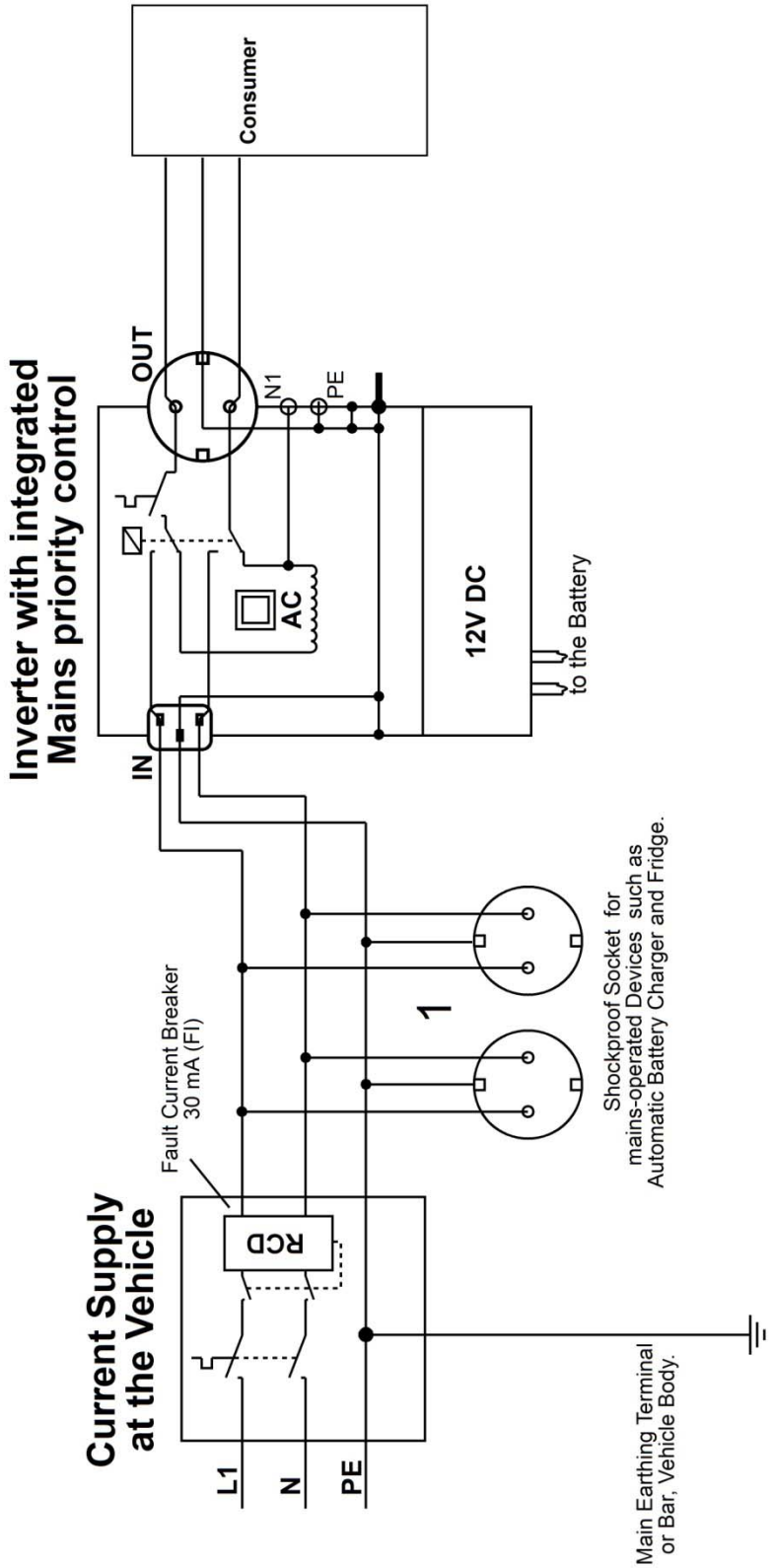

The consumer will be connected at the shockproof socket "OUT" of the unit.

The connection to the current supply at the vehicle is effected by insertion of the delivered mains cable into one of the mains sockets "1" and on the other side into the IEC power socket "IN" at the inverter.

Connection Plan 2:

Operation of a Multi-Socket at the Inverter with Mains Priority Control:

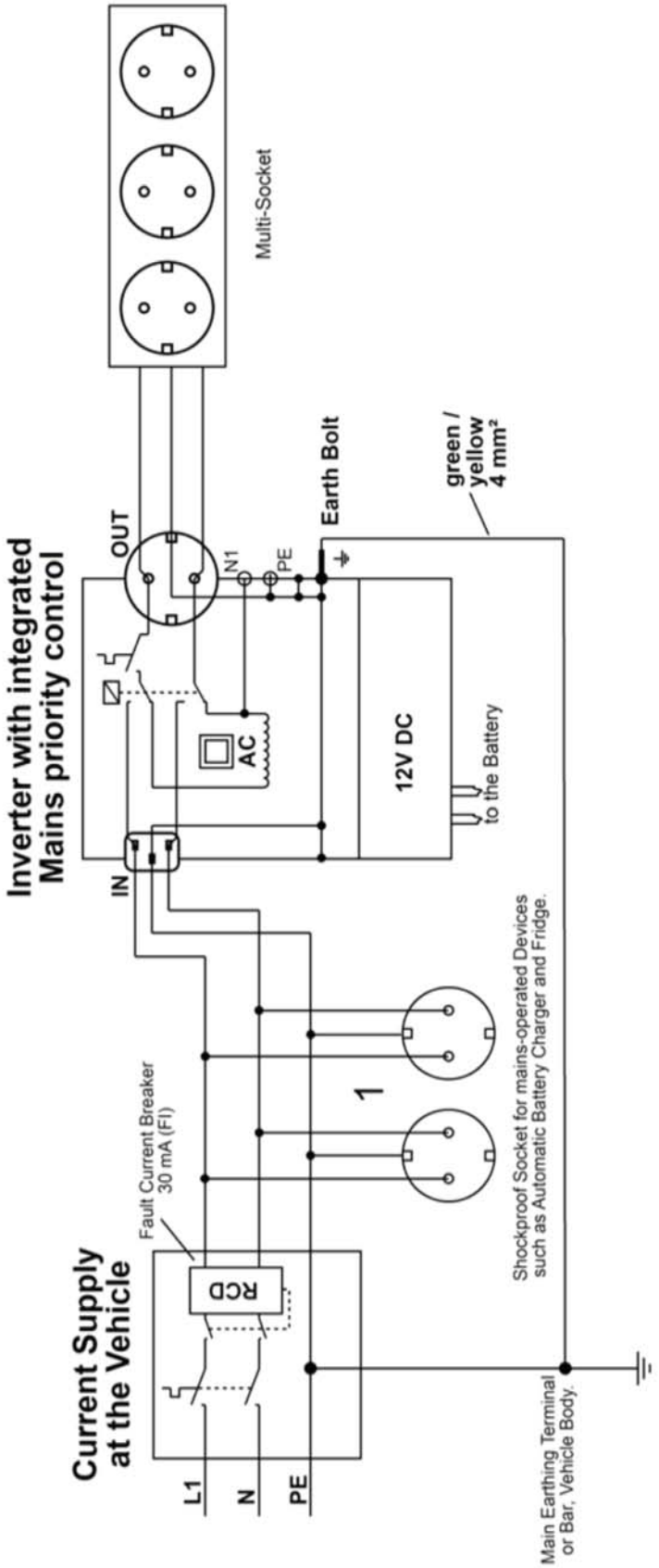

The multi-socket will be connected at the shockproof socket "OUT" of the unit. According to standards, the multi-socket should not be fixed installed, and the connection of the earth bolt at the inverter with the potential equalization cable 4 mm² green/yellow to the main earth terminal of the vehicle serves as protection from possible insulation faults of the connected units.

The connection to the current supply at the vehicle is effected by insertion of the delivered mains cable into one of the mains sockets "1" and on the other side into the IEC power socket "IN" at the inverter.

Connection Plan 3:

Operation of Several Consumers in Fixed Installed System at the Inverter with Mains Priority Control:

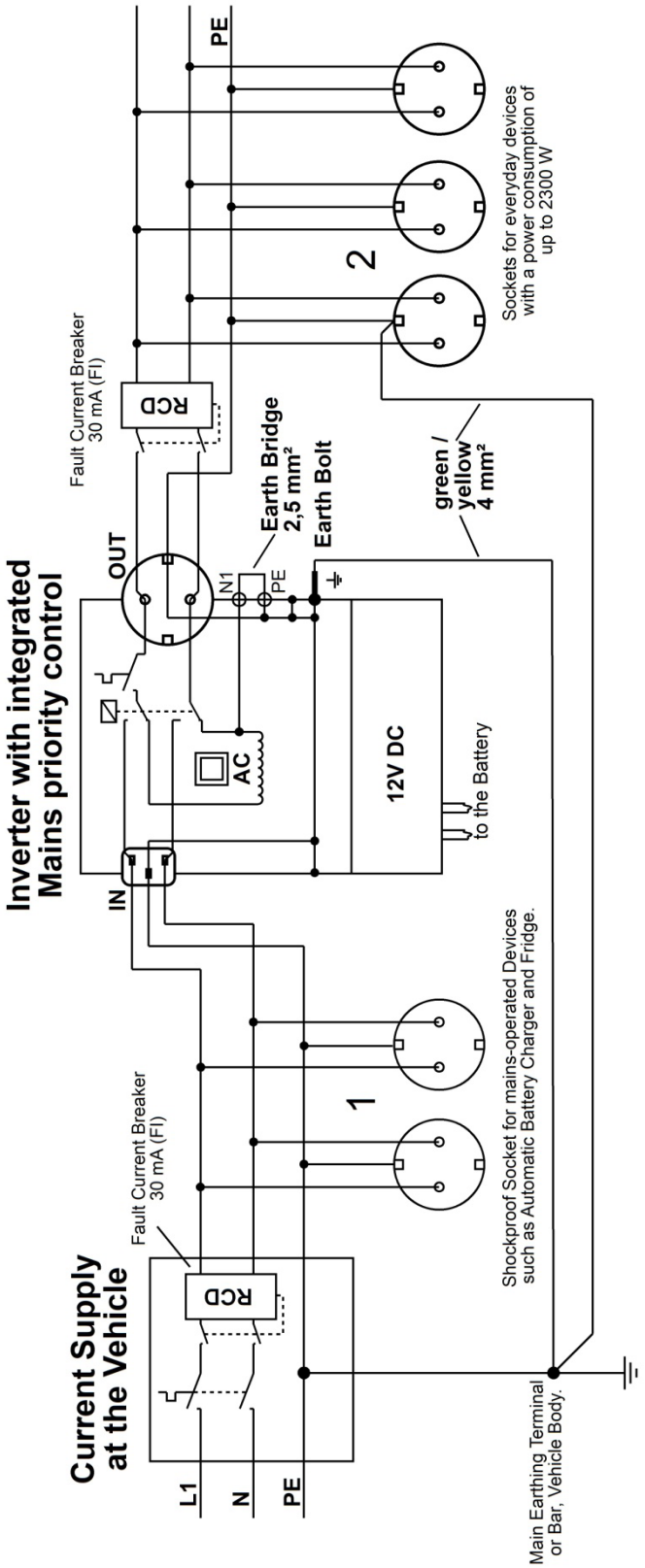

The fixed installed consumer sockets "2" are connected to the shockproof socket "OUT" of the inverter and, according to standards, is led over a fault current breaker (FI, 30 mA) and is equipped with an additional potential equalization cable. Furthermore, the terminal screws "N1" and "PE" at the inverter will be connected with a short insulated piece of wire 2.5 mm² serving as "earth bridge", and the earth bolt and the potential equalization cable 4 mm² green/yellow will be connected to the main earth terminal of the vehicle.

The connection to the current supply at the vehicle is effected by insertion of the delivered mains cable into one of the mains sockets "1" and on the other side into the IEC power socket "IN" at the inverter.