Dear Reader ...

We would like to congratulate you on the purchase of your new caravan. You have selected a top-quality vehicle which will afford you many years of enjoyment.

To enable you to always use and operate your caravan properly and easily, your Bürstner dealer will first provide you detailed instructions for all important functions when you take delivery.

This manual, as well as the instruction manuals from the appliance manufacturers are your constant travelling companions and will help answer any questions you may have regarding your caravan.

Before your first journey

Please familiarise yourself with this manual rather than relying on it strictly for reference.

Fill in the warranty cards for the appliances and special equipment in the individual instructions and send these cards to the respective manufacturers. This ensures your warranty claim for each appliance.

© 2009 Bürstner GmbH Kehl

Premio/Averso - 09/10 - Ausgabe 12/09 - 1865313 - BUE-0048-08EN

Contents

1 Introduction 7
1.1 General 8
1.2 Environmental tips 8

2 Safety 11
2.1 Fire prevention 11
2.1.1 Avoidance of fire risks 11
2.1.2 Fire-fighting 11
2.1.3 In case of fire 11
2.2 General 12
2.3 Road safety 12
2.4 Towing 13
2.5 Gas system 14
2.5.1 General instructions 14
2.5.2 Gas bottles 15
2.6 Electrical system 15
2.7 Water system 16

3 Before the journey 17
3.1 Keys 17
3.2 Registration 17
3.3 Connecting 18
3.4 Caravan couplings 19
3.4.1 AK 300/160 caravan coupling 19
3.4.2 AKS 1300 stabiliser 19
3.4.3 AKS 3004 stabiliser 20
3.5 Hitching device Easy-Pull (special equipment) 20
3.6 Caravan control system (ATC) (special equipment) 21
3.7 Detaching 22
3.8 Payload 22
3.8.1 Terms 23
3.8.2 Calculating the payload 24
3.8.3 Loading the caravan correctly 25
3.8.4 Caravan load, nose weight and axle load 26
3.8.5 Bike rack (special equipment) 27
3.9 External mirrors 29
3.10 Television (special equipment) 29
3.11 Road safety 30

4 During the journey 33
4.1 Driving with the caravan 33
4.2 Brakes 33
4.3 Driving in reverse 33

5 Pitching the caravan 35
5.1 Handbrake 35
5.2 Wheel chocks 35
5.3 Corner steadies 35
5.4 Entrance step (free-standing) 36
5.5 Waste water tank, mobile (special equipment) 37
5.6 230 V connection 37
5.7 Refrigerator 37
5.8 Satellite unit (special equipment) 37
5.8.1 Equipment with automatic antenna alignment 38
5.8.2 Equipment with semi-automatic antenna alignment 38

6 Living 39
6.1 Conversion door 39
6.1.1 Conversion door, outside (two-part) . . 39
6.1.2 Conversion door, inside (two-part) 40
6.1.3 Split conversion door 40
6.1.4 Conversion door, outside (single-section) 41
6.1.5 Conversion door, inside (single-section) 41
6.1.6 Window conversion door (single-section) 42
6.1.7 Insect screen on the conversion door (special equipment) 43
6.1.8 Folding insect screen on the conversion door (special equipment) 43
6.2 External flaps 44
6.2.1 Flap lock, elliptical-shaped 44
6.2.2 Flap lock, rectangular 45
6.2.3 Flap for toilet cassette 46
6.2.4 Flap for the 230 V connection, square 46
6.2.5 Cap for the drinking water filler neck (only for water tank 40 l) 47
6.3 Furniture flaps 47
6.3.1 Furniture flaps with push button 47
6.3.2 Furniture flaps with handle 48
6.3.3 Furniture flaps with handle and push button 48
6.4 Light switch 49
6.4.1 Entrance area 49
6.4.2 Interior 49
6.5 Spotlight 50
6.6 Holder for flat screen 51
6.6.1 Holder on the column 51
6.6.2 Holder in the TV cabinet 52
6.7 Heating 52
6.8 Ventilation 52
6.9 Windows 53
6.9.1 Hinged window with rotary hinges 53
6.9.2 Hinged window with automatic hinges 55
6.9.3 Blind and insect screen 56
6.10 Skylights 57
6.10.1 Heki skylight (mini and midi) (partially special equipment) 58
6.10.2 Heki skylight (special equipment) 59
6.11 Tables 61
6.11.1 Suspension table with folding leg 61
6.11.2 Swivel table 61
6.11.3 Suspension table and swivel table 62
6.11.4 Lift-off table, movable 62

6.12 Beds 63
6.12.1 Bunk bed 63
6.12.2 Fixed bed (manual setup) 63
6.12.3 Fixed bed (gas-pressure springs) 64
6.12.4 Pull-down bed (Averso Plus) 64
6.12.5 Pull-down bed, electrically operated (Averso Plus) (special equipment) 65
6.12.6 Widening single beds (special equipment) 67
6.13 Converting seating groups for sleeping 68
6.13.1 Bench and central seating group without additional cushion 68
6.13.2 Bench and central seating group with additional cushion 69
6.13.3 Round seating group 70
6.13.4 Round seating group with bed widening 71
6.13.5 Widening the bed into a laying area (special equipment) 72

7 Gas system 73
7.1 General 73
7.2 Gas bottles 74
7.3 Changing gas bottles 75
7.4 Gas isolator taps 76
7.5 External gas connection (special equipment) 76
7.6 DuoControl switching facility (special equipment) 77
7.7 Gas alarm system (special equipment) 78

8 Electrical system 81
8.1 General safety instructions 81
8.2 Terms 81
8.3 12 V power supply 81
8.3.1 Power supply unit CSV 300 82
8.4 230 V power supply 82
8.4.1 230 V connection 83
8.4.2 Power cable for external 230 V connection 83
8.5 Fuses 84
8.5.1 12 V fuses 84
8.6 230 V fuse 86
8.7 Thirteen-pin plug connection diagram 86
8.8 External socket (special equipment) 88
8.9 Circuit diagrams 89
8.9.1 Circuit diagram, interior 89
8.9.2 Circuit diagram, exterior 90

9 Appliances 91
9.1 General 91
9.2 Heater 92
9.2.1 To heat properly 92
9.2.2 Hot-air heater 93
9.2.3 Automatic ignition 94
9.2.4 Circulation fan (partially special equipment) 94
9.2.5 Airmix comfort package (special equipment) 95
9.2.6 Ultraheat additional electric heater (special equipment) 96
9.2.7 Warming unit for waste water pipes (special equipment) 96
9.2.8 Electrical floor warming unit (special equipment) 97
9.3 Air conditioning unit (special equipment) 98
9.3.1 Dometic 98
9.3.2 Telair 100
9.4 Boiler 101
9.4.1 Models with waste gas vent on the right-hand side of the vehicle 102
9.4.2 Truma boiler (special equipment) 102
9.4.3 Hot water source (special equipment) 104
9.5 Cooker 105
9.5.1 Gas cooker 106
9.5.2 Gas oven (Dometic) (special equipment) 107
9.5.3 Microwave oven (special equipment) 108
9.5.4 Extractor hood (special equipment) 109
9.6 Refrigerator 109
9.6.1 Refrigerator ventilation grill 109
9.6.2 Operation (Dometic 7 series, manual ignition) 109
9.6.3 Operation (Dometic 7 series with flame indicator) 111
9.6.4 Operation (Dometic 7 series with frame heater) 113
9.6.5 Operation (Dometic 8 series) 115
9.6.6 Refrigerator door locking mechanism 116

10 Sanitary fittings 119
10.1 Water supply, general 119
10.2 Water tank 120
10.2.1 Water tank 16 l 120
10.2.2 Water tank 22 l with external flap (special equipment) 120
10.2.3 Water tank 40 l (partially special equipment) 121
10.3 Waste water tank (special equipment) 122
10.4 Filling the water system 122
10.5 Emptying the water system 123
10.6 Toilet compartment 124

10.7 Toilet 124
10.7.1 Swivel toilet (Thetford C-200) 125
10.7.2 Toilet with fixed seat (Thetford C-402) 131

11 Care 139
11.1 External care 139
11.1.1 Washing with a high-pressure cleaner 139
11.1.2 Washing the vehicle 139
11.1.3 Windows of acrylic glass 140
11.1.4 Hot galvanized chassis 140
11.1.5 Underbody 140
11.1.6 Waste water tank 141
11.2 Interior care 141
11.3 Water system 142
11.3.1 Cleaning the water tank 142
11.3.2 Cleaning the water pipes 142
11.3.3 Disinfecting the water system 143
11.4 Extractor hood 144
11.5 Air conditioning unit 144
11.5.1 Dometic 144
11.5.2 Telair 144
11.6 Winter care 145
11.6.1 Preparations 145
11.6.2 Winter operation 145
11.6.3 At the end of the winter season 146
11.7 Lay-up 146
11.7.1 Temporary lay-up 146
11.7.2 Winter lay-up 147
11.7.3 Starting up the vehicle after a temporary lay-up or after lay-up over winter 148

12 Maintenance 149
12.1 Inspection work 149
12.2 Maintenance work 149
12.3 Stabilisers 149
12.3.1 General 149
12.3.2 AKS 1300 150
12.3.3 AKS 3004 150
12.4 Hitching device Easy-Pull 151
12.5 Braking system 151
12.6 Doors 151
12.7 Replacing bulbs, external 151
12.7.1 Front lights 152
12.7.2 Rear lights 153
12.7.3 Side lights 153
12.7.4 Types of bulbs for exterior lighting 154
12.8 Replacing bulbs, internal 154
12.8.1 Ceiling lamp (cover with clips) 154
12.8.2 Recessed halogen light 155
12.8.3 Recessed halogen light (flat) 155
12.8.4 Recessed halogen light (swivelling) 156
12.8.5 Halogen spotlight (swivelling) 156
12.8.6 Halogen spotlight (movable) 157
12.8.7 Halogen spotlight (gooseneck) 157
12.8.8 Cooker lamp 158
12.8.9 Cooker lamp (fixed) 158
12.8.10 Light rope 159
12.9 Spare parts 159
12.10 Vehicle identification plate 160
12.11 Warning and information stickers . . . 160

13 Wheels and tyres 161
13.1 General 161
13.2 Tyre selection 162
13.3 Tyre specifications 163
13.4 Handling of tyres 163
13.5 Changing wheels 163
13.5.1 General instructions 163
13.5.2 Tightening torque 164
13.5.3 Changing a wheel 164
13.5.4 Changing a wheel at alloy wheel rims 166
13.6 Spare wheel support in gas bottle compartment 166
13.7 Tyre pressure 167

14 Troubleshooting 171
14.1 Chassis 171
14.2 Braking system 171
14.3 Caravan control system (ATC) 172
14.4 Electrical system 173
14.5 Gas system 174
14.6 Cooker 174
14.6.1 Gas cooker/gas oven 174
14.6.2 Microwave oven 175
14.7 Heater, boiler and hot water source 175
14.7.1 Trumatic S hot-air heater 175
14.7.2 Truma boiler 175
14.7.3 Truma hot water source 176
14.8 Refrigerator 176
14.9 Air conditioning unit 177
14.9.1 Dometic 177
14.9.2 Telair 178
14.10 Water supply 178
14.11 Body 180

15 Special equipment 181
15.1 Weight details for special equipment 181

16 Technical data 183
16.1 Table of linear measures 183
16.2 Power supply 183

17 Helpful notes 185
17.1 Traffic rules in foreign countries 185
17.2 Help on Europe's roads 185
17.3 Speed limits 187

17.4 Driving with low beam in European countries 189
17.5 Sleeping in the vehicle away from camping areas 189
17.6 Gas supply in European countries . . . 191
17.7 Toll regulations in European countries 191
17.8 Tips on staying overnight safely during travel 191
17.9 Tips for winter campers 192
17.10 Travel checklists 192

18 Inspection plan 195

Please read this instruction manual completely before using the vehicle for the first time!

Always keep this instruction manual in the vehicle. Also inform all other users of the safety regulations.



▶ The non-observance of this symbol can lead to personal injury.



▷ The non-observance of this symbol can lead to damage being caused to, or inside the vehicle.



▷ This symbol indicates recommendations or special aspects.



▷ This symbol indicates actions which lead to environmental awareness.

This instruction manual contains sections which describe model-specific equipment or special equipment. These sections are specially marked. It may be that your vehicle has not been fitted with this special equipment. In some cases, the actual equipment of your vehicle may therefore be different from that shown in some illustrations and descriptions.

However, your vehicle may be fitted with other special equipment not described in this instruction manual.

Special equipment is described when an explanation is required.

Adhere to the instruction manuals which are separately enclosed.



▷ The details "right", "left", "front" and "rear" always refer to the vehicle in direction of travel.

▷ All dimensions and weight details are "approximate".

Should the vehicle be subjected to damage due to a failure to follow the instructions in this instruction manual, then the guarantee claim is deemed invalid.

Our vehicles are subjected to continuous development. Please understand that we reserve the right to alter the form, equipment and technology. Therefore, no claims can be made against the manufacturer as a result of the contents of this instruction manual. The equipment which was known and included at the time of going to press is described.

The reprinting, translation and copying, including extracts is not permitted without prior written authorisation from the manufacturer.



▷ The vehicle comes without a wheelbrace and vehicle jack. We suggest you obtain a commercially available wheelbrace before you first use your caravan, in case of an emergency. If no AL-KO vehicle jack (special equipment for AL-KO chassis) is present, obtain a conventional commercial scissor-type jack or an hydraulic vehicle jack, in order to have it ready in the case of mishap or emergency. Our authorised dealers and service centres will be happy to advise you.

1.1 General

The vehicle is constructed in accordance with the latest technology and the recognised safety regulations. Nevertheless, personal injury may result and the vehicle may be damaged if the safety instructions in this instruction manual are not followed.

Only use the vehicle in a technically impeccable condition. Follow the instructions in the instruction manual.

Malfunctions which impair the safety of persons or the vehicle should be immediately remedied by qualified personnel.

Have the vehicle's braking and gas systems inspected and repaired by an authorised specialist workshop only.

Alterations to the body are only to be carried out with the authorisation of the manufacturer.

Luggage and accessories may only be transported up to the maximum permissible gross weight.

Observe the test and inspection periods stipulated by the manufacturer.

1.2 Environmental tips



- ▷ Be considerate of the environment.
- ▷ Remember that: All kinds of waste water and household waste are not to be disposed of in drains or in the open countryside.
- ▷ On board, collect waste water only in the waste water tank or – if necessary – in other containers designed for that purpose.
- ▷ Only empty the waste water tank and toilet cassette or sewage tank at disposal stations at the camping or caravan sites, which are especially provided for this purpose. When stopping in towns and communities, observe the instructions at caravan sites or ask where there are disposal stations.
- ▷ Empty waste water tank as often as possible, even when it is not completely full (hygiene).

  If possible, flush out waste water tank and, if necessary, drainage pipe with fresh water every time it is emptied.
- ▷ Never allow the toilet cassette or sewage tank to become too full. Empty the toilet cassette or sewage tank frequently, at the latest as soon as the level indicator lights up.
- ▷ Separate household waste according to glass, tin cans, plastic and wet waste also when on a journey. Enquire at the town or community authority about disposal points. Household waste is not to be disposed of in waste paper baskets which are situated at car parks.
- ▷ Empty waste bins as often as possible into the containers provided for this purpose. This helps to avoid unpleasant smells and an accumulation of rubbish on board.
- ▷ When parked, do not allow the engine of the towing vehicle to run more than necessary. When running idle, a cold engine releases more contaminants than usual. The running temperature of the engine is achieved more quickly whilst the vehicle is in motion.
- ▷ Use an environmentally-friendly WC chemical agent for the WC which can also be biologically degraded and only use small doses.



- ▷ When staying in towns and communities for long periods, search for parking areas which are specially reserved for caravans and towing vehicles. Enquire at the town or community authority about parking spaces.
- ▷ Always leave the parking places in a clean condition.

Chapter overview

This chapter contains important safety instructions. The safety instructions are for the protection of persons and property.

The instructions address the following topics:

- fire prevention and what to do in case of fire
- general care of the vehicle
- road safety of the vehicle
- towing
- gas system of the vehicle
- electrical system of the vehicle
- water system of the vehicle

2.1 Fire prevention

2.1.1 Avoidance of fire risks



- ▶ Never leave children in the vehicle unattended.
- ▶ Keep flammable materials clear of heating and cooking appliances.
- ▶ Lights can get very hot. When the light is switched on, there must always be a safety distance of 30 cm between light and flammable objects. Fire hazard!
- ▶ Never use portable heating or cooking appliances.
- ▶ Only authorised qualified personnel may make changes to the electrical system, gas system or appliances.

2.1.2 Fire-fighting



- ▶ Always carry a dry powder fire extinguisher in the vehicle. The fire extinguisher must be approved, tested and close at hand.
- ▶ The fire extinguisher is not included in the scope of delivery.
- ▶ Have the fire extinguisher tested at regular intervals by authorised qualified personnel. Observe the date of testing.
- ▶ Always keep a fire blanket near the cooker.

2.1.3 In case of fire



- ▶ Evacuate all passengers.
- ▶ Cut off the electrical power supply and disconnect from the mains.
- ▶ Close regulator tap on the gas bottle.
- ▶ Sound the alarm and call the fire brigade.
- ▶ Fight the fire if this is possible without risk.



- ▷ Acquaint yourself with the position and operation of the emergency exits.
- ▷ Keep escape routes clear.
- ▷ Observe the fire extinguisher instructions for use.

All windows and doors which meet the following requirements are considered as emergency exits:

- Open to the outside or can be shifted in horizontal direction
- Opening angle at least 70°
- Minimum diameter of clearance = 450 mm
- Maximum distance from the vehicle floor = 950 mm

2.2 General



▶ The oxygen in the vehicle interior is used up by breathing and the use of gas operated appliances. That is why the oxygen needs to be replaced on a constant basis. For this purpose, forced ventilation options (e.g. skylights with forced ventilation, mushroom-shaped vents or floor vents) are fitted to the vehicle. Never cover or block forced ventilations from the inside or outside with objects such as e.g. a winter mat. Keep forced ventilations clear of snow and leaves. There is a danger of suffocation due to increased CO_2 levels.

▶ Observe the headroom of the doors.



▷ As far as the appliances (heater, cooker, refrigerator, etc.) are concerned, the instruction manuals are authoritative. It is imperative that they be observed.

▷ Fitting accessories or special equipment can alter the dimensions, weight and road behaviour of the vehicle. Some of the parts must be entered in the vehicle papers.

▷ Only use wheel rims and tyres which are approved for the vehicle. Information concerning the size of the approved wheel rims and tyres is included in the vehicle documents or can be obtained from authorised dealers and service centres.

▷ Firmly apply the handbrake when parking the vehicle.



▷ When leaving the vehicle, it is imperative that all doors, external flaps and windows are closed.

▷ The vehicle may only be driven by drivers who hold a driving licence which is valid for the respective vehicle class.

▷ When selling the vehicle, hand over all instruction manuals for the vehicle and the fitted appliances.

2.3 Road safety



▶ Before commencing the journey, carry out a functional check of indicating and lighting equipment and the brakes.

▶ If the vehicle has been stationary for a long period (approx. 10 months) have the braking and gas systems checked by an authorised specialist workshop.

▶ Before commencing the journey, secure the hinged pull-down bed.

▶ Before commencing the journey, remove the television from the support and store it securely.

▶ Before commencing the journey, place and secure the flat screen and screen support in the initial position. If the screen holder is installed in a TV cabinet: Close TV cabinet.



- ▶ During the journey, no persons are to travel inside the caravan.
- ▶ In case of underpasses, tunnels or similar obstacles, note the total height of the vehicle (including the roof load).
- ▶ In winter, the roof must be free of snow and ice before commencing the journey.
- ▶ Before commencing the journey, empty the waste water tank.
- ▶ Check tyre pressure before a journey or every 2 weeks. Wrong tyre pressure causes excessive wear and can lead to damage or even to tyre burst. You can lose control of the vehicle.



- ▷ Before commencing the journey, distribute the payload evenly within the vehicle (see chapter 3).
- ▷ When loading the vehicle and when taking a rest from driving, in order to load luggage or food, for example, observe the maximum permissible gross weight and axle loads (refer to vehicle documents).
- ▷ Do not exceed the maximum permissible nose weight on the caravan coupling and do not let the weight fall below the minimum nose value. Load the caravan accordingly.
- ▷ While driving with your caravan, the towing vehicle must be equipped with two external mirrors.
- ▷ Before commencing the journey, ensure that all cupboard doors, the toilet compartment door and all drawers and flaps are secure. Engage the refrigerator door securing device.
- ▷ Before commencing the journey, close windows and skylights.
- ▷ Before commencing the journey, close all external flaps and lock them.
- ▷ Before commencing the journey, remove the external supports and retract the corner steadies or steady legs, which are fitted to the vehicle.
- ▷ Before commencing the journey, crank the jockey wheel up as far as possible.
- ▷ Before commencing the journey, put the antenna in park position.
- ▷ During the initial journey and each time after changing a wheel, re-tighten the wheel bolts/wheel nuts after 50 km (30 miles). Subsequently inspect them at regular intervals in order to ensure that they are firmly seated.
- ▷ Tyres may not be older than 6 years as the material becomes brittle over time (see chapter 13).

2.4 Towing



- ▶ Care is to be taken when connecting and detaching a trailer. Risk of accident and injury!
- ▶ No persons are to be between the towing vehicle and the trailer during positioning for connecting and detaching.

2.5 Gas system

2.5.1 General instructions



- ▶ Before commencing the journey, when leaving the vehicle or when gas equipment is not in use, close all gas isolator taps and the main isolator tap on the gas bottle.
- ▶ No appliance operated by a naked flame (e.g. heater or refrigerator) may be in operation when filling the tank, on ferries or in the garage. Danger of explosion!
- ▶ Do not use appliances operated with a naked flame in closed spaces (e.g. garages). Danger of poisoning and suffocation!
- ▶ Only have the gas system maintained, repaired or altered by an authorised specialist workshop.
- ▶ Have the gas system checked by an authorised specialist workshop according to the national regulations before commissioning. This also applies for not registered vehicles. For modifications to the gas system have the gas system immediately checked by an authorised specialist workshop.
- ▶ The gas pressure regulator and exhaust gas pipes must also be inspected. The gas pressure regulator has to be replaced after 10 years at the latest. The vehicle owner is responsible for seeing that this is carried out.
- ▶ In case of a defect of the gas system (gas odour, high gas consumption) there is danger of explosion! Close regulator tap on the gas bottle immediately. Open doors and windows and ventilate well.
- ▶ If the gas system is defective: Do not smoke; do not ignite any open flames, and do not operate electric switches (light switches etc.).
- ▶ Before using the cooker make sure that there is sufficient ventilation. Open windows or the skylight.
- ▶ Do not use the gas cooker or gas oven for heating purposes.
- ▶ If there are several gas devices, each gas device must have its own gas isolator tap. If individual gas devices are not in use, close the respective gas isolator tap.
- ▶ Ignition safety valves must close within 1 minute after the gas flame has extinguished. A clicking sound is audible. Check function from time to time.
- ▶ The built-in gas devices are exclusively meant for use with propane or butane gas or a mixture of both. The gas pressure regulator as well as all built-in gas devices are designed for a gas pressure of 30 mbar.
- ▶ Propane gas is capable of gasification up to -42 °C, whereas butane gas gasifies at 0 °C. Below these temperatures no gas pressure is available. Butane gas is unsuitable for use in winter.
- ▶ Regularly inspect the gas tube fitted to the gas bottle connection for tightness. The gas tube must not have any tears and must not be porous. Have the gas tube replaced by an authorised specialist workshop no later than ten years after the manufacturing date. The operator of the gas system must see to it that the parts are replaced.
- ▶ Due to its function and construction, the gas bottle compartment is a space which is open to the exterior. Never cover or block up the standard forced ventilations. Otherwise gas that is emitted can not be diverted to the outside.

- ▶ Do not use the gas bottle compartment as storage space as it is not moisture-proof.
- ▶ Secure the gas bottle compartment against unauthorised access. To do this, lock the compartment.
- ▶ The regulator tap on the gas bottle must be accessible.
- ▶ Only connect gas-operated devices (e.g. gas grill) which have been designed for a gas pressure of 30 mbar.
- ▶ The exhaust gas pipe must be fitted tightly to the heating system and to the vent and must be sealed. The exhaust gas pipe must not show any evidence of damage.
- ▶ Exhaust fumes must be able to escape into the atmosphere unhindered and fresh air must be able to enter unhindered. For this reason, keep the exhaust pipe and intake openings clean and unobstructed (e.g. free from snow and ice). For this reason, no snow walls or aprons may lie against the vehicle.

2.5.2 Gas bottles

- ▶ Gas bottles are only to be transported within the designated gas bottle compartment.
- ▶ Place the gas bottles in vertical position in the gas bottle compartment.
- ▶ Fasten the gas bottles so that they are unable to turn or tilt.
- ▶ If the gas bottles are not connected to the gas tube, always place the protective cap on top.
- ▶ Close the regulator tap on the gas bottle before the gas pressure regulator or gas tube are removed from the gas bottle.
- ▶ Use your hands only to connect the gas pressure regulator or the gas tube to the gas bottles. Do not use any tools.
- ▶ Only use special gas pressure regulators with a safety valve designed for vehicle use. Other gas pressure regulators are not permitted and cannot meet the demanding requirements.
- ▶ Use the gas pressure regulator defroster if the temperature falls below 5 °C.
- ▶ Use only 11 kg or 5 kg gas bottles. Camping gas bottles with built-in check valve (blue bottle with max. 2.5 or 3 kg content) are can be used in exceptional cases with a safety valve.
- ▶ Use the shortest possible tube lengths (150 cm max.) for external gas bottles.
- ▶ Never block the floor ventilation openings below the gas bottles.

2.6 Electrical system

- ▶ Only allow qualified personnel to work on the electrical system.
- ▶ Prior to carrying out work on the electrical system, switch off all devices and lights, disconnect the battery and disconnect the vehicle from the mains.
- ▶ Only use original fuses with the stipulated values.



- ▶ Only replace defective fuses when the cause of the defect is known and has been remedied.
- ▶ Never bridge or repair fuses.

2.7 Water system



- ▶ Water left standing in the water tank or in the water pipes becomes undrinkable after a short period. Therefore, before each use of the vehicle, thoroughly clean the water pipes and the water tank. After each use of the vehicle completely empty the water tank and the water pipes.
- ▶ In the case of lay-ups lasting more than a week disinfect the water system before using the vehicle.



▷ If the vehicle is not used for several days or if it is not heated when there is a risk of frost, empty the entire water system. Leave the water taps on in central position. Leave the safety/drainage valve (if there is one) and all drain cocks open. Frost damage to appliances, frost damage to the vehicle and deposits in water-carrying components can be avoided in this way.

Chapter overview

This chapter contains important information which has to be noted before commencing your journey or carrying out any tasks before the journey.

The instructions address the following topics:

- keys
- registration
- connecting and detaching to the towing vehicle
- caravan coupling
- hitching device Easy-Pull
- caravan control system
- calculating the payload
- correct loading of the caravan
- external mirrors
- storing the television

At the end of the chapter there is a checklist which once again summarises the most important points.

3.1 Keys



Fig. 1 Keys

Two keys (Fig. 1) are included with the caravan.

The keys fit the:

- Conversion door
- Service flaps
- Toilet flap
- Gas bottle compartment flap

Always deposit a replacement key outside the vehicle. Make a note of the key number. Our authorised dealers and workshops can offer assistance in case of loss.

3.2 Registration

Your caravan is a vehicle which must be registered. Observe national regulations on registration.

Please remember that certain countries require a separate national code sticker in addition to the EU plate.

3.3 Connecting



- ▶ Care is to be taken when connecting and detaching a trailer. Risk of accident and injury!
- ▶ No persons are to be between the towing vehicle and the trailer during positioning for connecting and detaching.
- ▶ Observe the permissible nose weight and rear axle load of the towing vehicle. Nose weight and rear axle load must not be exceeded. The values of the nose weight and rear axle load are included in the documents of the vehicle and the caravan coupling.
- ▶ Ensure that the interior of the coupling is not soiled and that the movable parts of the coupling (not the ball retainer) are lubricated.
- ▶ The tow ball is not to be lubricated when using a stabiliser. The friction pads are pressed against the coupling ball and thereby generate an anti-rolling moment. This anti-rolling effect is only guaranteed when the towing vehicle coupling head is free of lubricant and other residues. When lubricating the stabiliser ensure that no lubricant is on the friction pads.



- ▷ Caravan with an overrun brake: Do not connect or detach caravan with the overrun brake on.
- ▷ Caravan coupling with detachable ball neck: If the ball neck is mounted incorrectly, there is the danger of the trailer breaking away. Observe the instruction manual for the caravan coupling.
- ▷ In order to connect the vehicle, crank the supporting jockey wheel down and set it down on the ground.
- ▷ Do not use the stabilising lever of the stabiliser as a maneuvering aid.



- ▷ Check whether the caravan's connector plug fits into the socket of the towing vehicle. If connector plug and socket do not match, ask your authorised dealers and workshops for adapting options.
- ▷ Further information about the stabiliser can be obtained in the manufacturer's instruction manual.

Connecting:

- ■ Connect the caravan (see section 3.4). The coupling jaw and the ball must interlock and are not to be loosely superposed. The coupling jaw must completely surround the ball.
- ■ Connect the breakaway brake cable with a loop to a suitable anchorage point on the vehicle, do **not** attach to the tow ball. Thereby, observe the cable length: The cable must not trail on the ground or trigger the braking function around corners.
- ■ Crank the jockey wheel up as far as possible. Adjust the running role in parallel to the direction of travel and to the draw box.
- ■ Insert the connector plug of the caravan in the socket of the towing vehicle. Ensure that the hooks of the safety cover engage with the plug. The hooks prevent the plug from becoming loose during the journey.
- ■ Put the connection cable in a loose loop across the drawbar. Make sure that it does not touch the ground.
- ■ Check whether the caravan coupling is mounted correctly on the coupling ball. Pay attention to the safety indicator.
- ■ Check whether corner steadies and jockey wheel are raised.
- ■ Check the caravan lighting system whilst the towing vehicle is connected.

3.4 Caravan couplings

▷ Before connecting, ensure that the tow ball of the coupling device is free of dirt and grease.

3.4.1 AK 300/160 caravan coupling

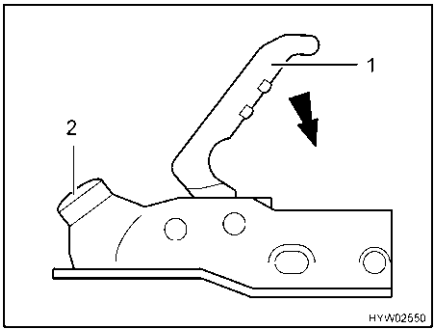

Fig. 2 AK 300/160 caravan coupling

The coupling mechanism has an "Open position". As long as the caravan coupling is not placed on top of the implement coupling, the coupling handle remains open.

Connecting:

- Place the open caravan coupling (Fig. 2) on the towing vehicle caravan ball. The caravan coupling now locks automatically and audibly in place. The handle glides automatically back to its initial position.
- In addition, push the coupling handle (Fig. 2,1) down with your hand (not with your foot). Closing and securing is carried out automatically.
- Conduct a visual inspection: The green cylinder on the safety indicator (Fig. 2,2) must be visible.

3.4.2 AKS 1300 stabiliser

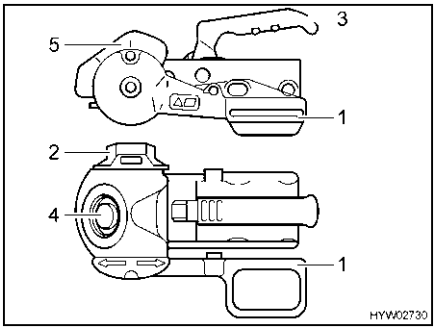

Fig. 3 AKS 1300 stabiliser

Connecting:

- Pull up the stabilising lever (Fig. 3,1) as far as possible.
- Turn the handwheel (Fig. 3,2) in an anticlockwise direction as far as possible in the open position.
- Pull the coupling handle (Fig. 3,3) upwards.
- Place the opened stabiliser on the caravan coupling. The coupling handle must audibly lock back into its initial position.
- In addition, push the coupling handle downwards by hand (not with your foot). Closing and securing is carried out automatically.

- Conduct a visual inspection: The green cylinder on the safety indicator (Fig. 3,4) must be visible.
- Turn handwheel in a clockwise direction until it can be felt and heard that the torque limiting mechanism grates.
- Push the stabilising lever down until the marking on the stabilising lever is aligned with that on the stabilising housing (Fig. 3,5).

3.4.3 AKS 3004 stabiliser

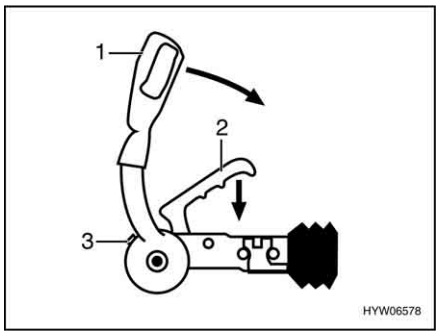

Fig. 4 AKS 3004 stabiliser

Connecting:

- Pull up the stabilising lever (Fig. 4,1) as far as possible.
- Pull the coupling handle (Fig. 4,2) upwards.
- Place the opened stabiliser on the caravan coupling. The coupling handle must audibly lock back into its initial position.
- In addition, push the coupling handle downwards by hand (not with your foot). Closing and securing is carried out automatically.
- Conduct a visual inspection: The green cylinder on the safety indicator (Fig. 4,3) must be visible.
- Activate the stabilising mechanism. Push the stabilising lever (Fig. 4,1) down to its stop limit.

3.5 Hitching device Easy-Pull (special equipment)

▷ On sloping terrain or on heavy soil, the belt can be laid around the caravan coupling and returned to its initial position. This produces a simple block and tackle. This range of the hitching device is reduced in half.

▷ Also read the manufacturer's instruction manual.

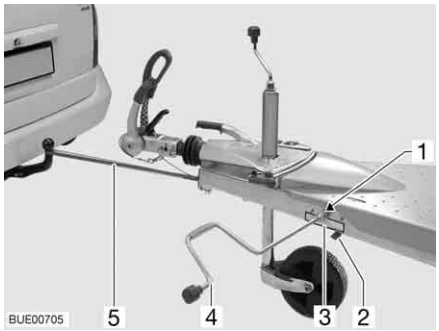

Fig. 5 Hitching device Easy-Pull

Connecting the caravan:

- Drive up to the caravan with the towing vehicle.
- Push the locking lever (Fig. 5,2) to the open position.

- Pull the belt with the hook (Fig. 5,5) out towards the front, lay it around the ball neck of the caravan coupling of the towing vehicle and the secure it.
- Push the locking lever (Fig. 5,2) to the close position.
- Release the handbrake on the caravan.
- Attach the crank for the corner steadies of the caravan (Fig. 5,4) to the hexagon nut (Fig. 5,1) of the cranking mechanism and start cranking. Crank in the rotational direction indicated on the label (Fig. 5,3).
- Pull the caravan as far as possible over the tow ball of the caravan coupling of the towing vehicle.
- Couple the caravan and remove the crank.
- Push the locking lever (Fig. 5,2) to the open position.
- Unhook the belt and return it to its original position.
- Push the locking lever to the close position.

3.6 Caravan control system (ATC) (special equipment)



▶ The steady plus on the connection socket on the towing vehicle must be protected with 15 A or 20 A fuses. Fire hazard!

▶ The caravan control system cannot override the physically preset limits. Do not exceed the maximum speed of 100 km/h intended by the designers, and always adapt your speed to suit the weather, road and traffic conditions.



▷ Also read the manufacturer's instruction manual.



1 Control LED

Fig. 6 Control LED

- Couple caravan.
- Use the connection cable to connect the caravan to the towing vehicle. The caravan control system starts a self test. The control LED (Fig. 6, 1) on the caravan lights up red for about 3 seconds.
- Check whether the control LED lights up green after the self test. The caravan control system is now active.

3.7 Detaching



- ▶ Care is to be taken when connecting and detaching a trailer. Risk of accident and injury!
- ▶ In addition, observe the safety instructions with respect to connecting included in this instruction manual.

Detaching:

- ■ Apply the caravan handbrake.
- ■ Place the wheel chocks behind both of the wheels.
- ■ Remove the connector plug of the caravan from the towing vehicle socket and insert it in the holder on the drawbar.
- ■ Remove the breakaway cable from the towing vehicle.
- ■ Crank the jockey wheel down until it is set firmly on the ground. Now loosen the caravan coupling.
- ■ Using the jockey wheel, lift the drawbar until the towing vehicle can be driven away without risk.

3.8 Payload



- ▶ Overloading the vehicle and wrong tyre pressure can cause tyres to burst. You can lose control of the vehicle.
- ▶ Only the maximum permissible gross weight and the mass in a ready-to-drive condition, not the actual weight of the vehicle, is stated in the vehicle documents. For your own safety, we recommend that you have your loaded vehicle weighed on a public weighbridge before you set out on your journey.



- ▷ Do not exceed the maximum permissible gross weight stated in the vehicle documents by the payload.
- ▷ Built-in accessories and special equipment reduce the payload.
- ▷ Adhere to the axle load stated in the vehicle documents.

Load the caravan so that the drawbar coupling head is not pushed downwards due to the permissible nose weight. Heavy objects should be close to the axles and a weight centre should be in the centre of the vehicle.

When loading the caravan observe:

- The permissible maximum caravan load
- The maximum permissible nose weight (e.g. 50 kg)
- The minimum nose weight in accordance with national regulations

This information is in the towing vehicle instruction manual.

Maximum permitted payloads

Description		Load (kg)
Roof load		200
Bunk beds		100
Pull-down bed		200
Bike rack	Double	35

3.8.1 Terms

▷ Technically speaking, the term "mass" has now replaced the term "weight". However, "weight" is still the term more frequent in common use. For better understanding, "mass" is therefore only used in the following sections for fixed formulations.

▷ All specifications according to EU norm DIN EN 1645-2.

Maximum permissible gross weight in a laden condition

The maximum permissible gross weight in a laden condition is the weight that a vehicle may never exceed.

The maximum permissible overall weight in laden condition consists of the **mass in ready-to-drive condition** and of the **payload**.

In the vehicle documents, the manufacturer has specified the maximum permissible gross weight in a laden condition.

Mass in ready-to-drive condition

The mass in ready-to-drive condition is the weight of the ready-to-drive standard vehicle.

The mass in ready-to-drive condition is made up as follows:

- Unladen weight (mass of the empty vehicle) with factory-installed standard equipment
- Basic equipment weight

Basic equipment includes all equipment and fluids required for safe and proper vehicle use. The weight of the basic equipment includes:

- Water system filled up to 90 % (water tank and pipes)
- Gas bottles filled up to 90 %
- A full heating system
- A full toilet flushing system
- The power cables for the 230 V power supply
- The installation kit for an auxiliary battery if an auxiliary battery can be used

The waste water and sewage tanks are empty.

Example for calculating the basic equipment

Water tank with 16 l	16 kg
Gas bottles (2 x 11 kg $_{gas}$ + 2 x 14 kg $_{bottle}$)	+ 50 kg
230 V power cable	+ 4 kg
Total	**= 70 kg**

In the vehicle documents, the manufacturer specifies the mass in ready-to-drive conditions.

Payload

The payload is made up as follows:

- Additional equipment
- Personal equipment

You will find explanations on the individual components of the payload in the following text.

▷ The vehicle's payload can be increased by reducing the weight in a ready-to-drive condition. To do this, it is allowed for example to empty the fluid containers or to remove the gas bottles.

Additional equipment

Additional equipment includes accessories and special equipment. Examples of additional equipment include:

- Spare wheel
- Bike rack
- Satellite unit
- Microwave oven
- Hot water supply

Chapter 15 lists the weights of the various items of special equipment; they may also be obtained from the manufacturer.

Personal equipment

Personal equipment includes all items in the vehicle that are not included in the additional equipment. For example, personal equipment can include the following:

- Foodstuffs
- Crockery
- Television
- Radio
- Clothes
- Bedding
- Toys
- Books
- Toiletries

No matter where kept, personal equipment also includes:

- Bikes
- Boats
- Surfboards
- Sports equipment

For the personal equipment, according to the applicable regulations, the manufacturer must use a minimum weight that is determined according to the following formula:

Formula

Minimum weight M (kg) = 10 x N + 10 x L + 30

Explanation

N = maximum number of beds, as stated by the manufacturer
L = total length of the caravan in metres, not including the drawbar

Example

Caravan with 4 beds and a length of 5 m:

Minimum weight M (kg) = 10 x 4 $_{\text{beds}}$ + 10 x 5 $_{\text{metres}}$ + 30 = 120 kg

3.8.2 Calculating the payload



- ▶ The payload calculation at the factory is partly based on all-inclusive weights. For safety reasons, the maximum permissible gross weight in a laden condition must not be exceeded.
- ▶ Only the maximum permissible gross weight and the mass in a ready-to-drive condition, not the actual weight of the vehicle, is stated in the vehicle documents. For your own safety, we recommend that you have your loaded vehicle weighed on a public weighbridge before you set out on your journey.

The payload (see section 3.8.1) is the difference in weight between

- Maximum permissible gross weight in a laden condition and
- Vehicle mass complete in a ready-to-drive condition.

Example for calculating the payload

	Mass in kg to be calculated	Calculation
Maximum permissible gross weight according to vehicle documents	1500	
Vehicle mass in a ready-to-drive condition, including basic equipment according to vehicle documents	- 1200	
This results in a permissible payload of	**300**	
Additional equipment	- 40	
For the personal equipment this results in	**= 260**	

The calculation of the payload from the difference between the maximum permissible gross weight in laden condition and the mass specified by the manufacturer in ready-to-drive condition is however only a theoretical value.

Only if the vehicle is weighed with full tanks, full gas bottles and complete additional equipment on a public weighbridge, can the actual payload be determined.

The actual payload is the difference between the maximum permissible gross weight in laden condition and the weighed vehicle weight.

The result is the weight that is permitted for the actual load of the personal equipment.

3.8.3 Loading the caravan correctly



- ▶ Never exceed the maximum permissible gross weight.
- ▶ Distribute the load evenly on the left and right sides of the vehicle.
- ▶ Store all objects in such a way that they cannot slip.
- ▶ Store heavy objects (awning, tin cans, etc.) close to the axles. Low-lying storage compartments whose doors do not open in the direction of travel are particularly suited for storing heavy objects.
- ▶ Stack light objects (laundry) in the roof storage cabinets.
- ▶ Never concentrate the caravan load at the rear.

The payload arrangement recommended cannot be adhered to consequently as the storage facilities are to be found throughout the complete caravan. Ensure that heavy items are close to the axles and the lower area, i.e. directly above the vehicle floor. Store heavy objects (awning, tin cans, etc.), if possible, in the towing vehicle.

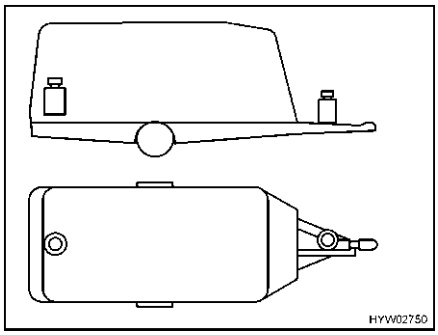

Fig. 7 Incorrect weight distribution

Incorrectly loaded Loads stored apart from each other (Fig. 7) lead to inclination to skid.

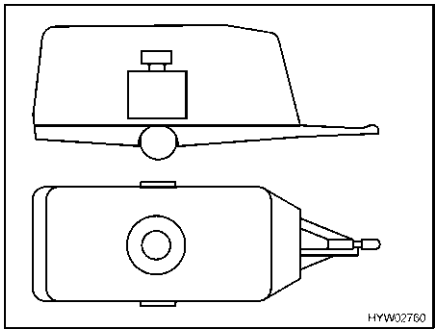

Fig. 8 Correct weight distribution

Correctly loaded Do not store heavy objects such as awnings, tin cans, etc. in the caravan but rather in the towing vehicle. Secure bicycles on the roof of the towing vehicle. Store all loads close to the axle (Fig. 8).

3.8.4 Caravan load, nose weight and axle load

▷ The nose weight of the caravan may not exceed 100 kg.

▷ The information on the towing vehicle documents is important for the selection of the car and caravan.

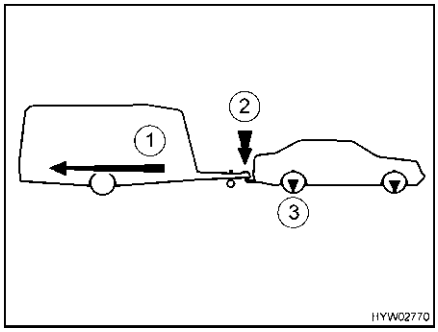

1 Caravan load
2 Nose weight
3 Axle load

Fig. 9 Caravan load, nose weight and axle load

Caravan load The caravan load (Fig. 9,1) stipulated in the towing vehicle documents provides information as to the **maximum weight** which the towing vehicle is permitted to tow. The caravan load refers to the **actual** weight of the caravan and **not** to the maximum permissible gross weight of the caravan.

Example The towing vehicle may tow 1,200 kg. If the caravan has a maximum permissible gross weight of 1,200 kg and in fact weighs 900 kg, it can be loaded with another 300 kg. If however the caravan has a maximum permissible gross weight of 1,400 kg, it may only be loaded to a maximum of 1,200 kg.

Nose weight The nose weight (Fig. 9,2) specifies how much weight the caravan drawbar can apply to the caravan coupling of the towing vehicle. Information is to be found in description of the caravan couplings and the vehicle documents. Therefore, a caravan coupling with a permissible nose weight of 50 kg may not support a loaded caravan which has a nose weight of 75 kg. Additionally, for the permissible gross weight the nose weight must be taken into consideration. If necessary the payload in the towing vehicle must be reduced by the amount of the nose weight.

The maximum permissible gross weight for the towing vehicle and for the caravan is not to be exceeded.

Only when the nose weight is adapted optimal to the towing vehicle and caravan combination, the towing vehicle and caravan achieves its maximum stability and safety in highway traffic. The optimal nose weight is simultaneously the maximum possible nose weight.

- Please refer to the vehicle documents and the description of the caravan coupling for the maximum permissible nose weight.
- If different values are specified in the vehicle documents and in the description of the caravan coupling: Please select the **lowest** value. This value is the **maximum possible nose weight** for the towing vehicle and caravan.
- Check the nose weight before each journey, e.g. with a nose weighing scales. To obtain a correct value, position the nose weighing scales vertical under the coupling jaw and place the caravan drawbar horizontal.
- The payload in the caravan must be distributed in such a way that the measured nose weight comes as close as possible to the maximum permissible nose weight. The maximum permissible nose weight is not be exceeded.

Axle load The axle load (Fig. 9,3) is also specified in the vehicle documents of the towing vehicle and provides information concerning the permissible maximum load for the front and rear axles. The axle load may not be exceeded by a trailer. The above illustration shows where which forces act on the car and caravan.

3.8.5 Bike rack (special equipment)



- ▶ Observe the permissible axle loads and maximum permissible gross weight when loading the bike rack.
- ▶ Do not fall below the minimum nose weight.
- ▶ Bicycles may not jut out beyond the maximum width of the vehicle. Adjust the attachments for the bikes accordingly.
- ▶ Load the bike rack with bicycles only (max. two units).
- ▶ Fasten bicycles using the straps provided and check to see that they are secure after you have driven a few kilometres.

- ▶ Check the secure attachment of the bicycles on the bike rack after the first 10 km and then at each break in the journey.
- ▶ Do not use the bike rack as luggage rack or ladder.

- ▷ The bike rack is only to be used for transporting bicycles.
- ▷ The gross weight specified by the manufacturer must not be exceeded.
- ▷ The identification plate and rear lights must not be covered.
- ▷ The maximum permissible payload of the bike rack is 35 kg.
- ▷ When loading the bike rack, observe the centre of gravity. If the bike rack is only loaded with **one** bicycle, position the bicycle as closely as possible to the vehicle wall.
- ▷ Driving with a folded out bike rack without bicycles is not permitted.
- ▷ Before every journey, check:

  Is the bike rack without bicycles folded in correctly?

  Are the bicycles securely fastened to the bike rack using the bike rack belts?

Front bike rack

The bike rack is attached to the struts of the drawbar with the installation material.

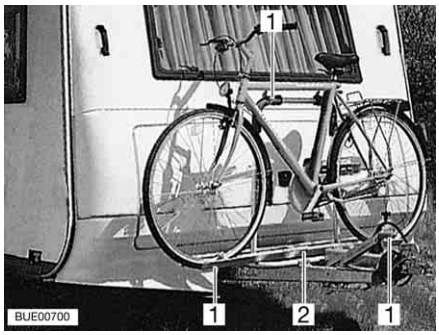

Fig. 10 Front bike rack

Loading the bicycles:

- ■ Put the bikes on to the bike rack (Fig. 10,2) and secure them with quick straps (Fig. 10,1).

Bike rack on the rear wall

The bike rack is hooked to the rear wall by means of two holders and is bolted to the floor plate on the bottom.



Fig. 11 Bike rack on the rear wall

Loading the bicycles:

- ■ Put the bikes onto the bike rack and secure them with quick straps.
- ■ In addition, secure each bicycle on the retaining bracket or retaining arm.

3.9 External mirrors

▶ Before every journey, re-adjust the external mirrors on the towing vehicle for safety reasons.

▷ Additional mirrors must be EC-type certified and thus meet the EC guidelines.

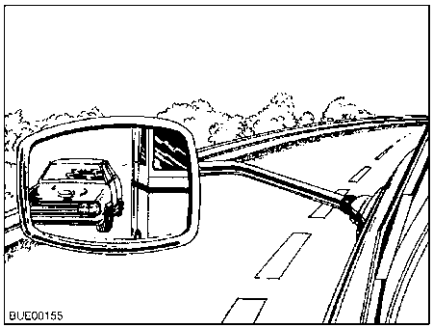

Fig. 12 External mirrors

When towing a trailer, the towing vehicle must be equipped with two external mirrors. The external mirrors ensure that the roadway next to the trailer can be clearly seen.

The following applies when purchasing additional mirrors

- If possible, take the towing vehicle and caravan with you.
- Test on site to see if they fit.
- Check that the mirror is suitable for the vehicle and the seating position of the driver.

3.10 Television (special equipment)

▶ Before commencing the journey, remove the television from the support and store it securely.

▶ Before commencing the journey, place and secure the flat screen and screen support in the initial position. If the screen holder is installed in a TV cabinet: Close TV cabinet.

▶ Before commencing the journey, ensure that the antenna is in park position. Danger of accidents! Park position means: The antenna points towards the back, is fully lowered and is locked in this position.

▷ If there is a risk of frost, do not leave the flat screen television in the vehicle.

▷ Further information on positioning the flat screen can be obtained from chapter 6.

3.11 Road safety



▶ Check tyre pressure before a journey or every 2 weeks. Wrong tyre pressure causes excessive wear and can lead to damage or even to tyre burst. You can lose control of the vehicle.

Before commencing the journey, work through the checklist:

Towing vehicle with caravan

No.	Checks	Checked
1	All vehicle documents are on board	
2	Two external mirrors fitted to towing vehicle	
3	Nose weight has not been exceeded or fallen below the minimum	
4	Tyres in proper condition	
5	Road lighting system working	
6	Overrun brake functions correctly	
7	Brakes react evenly	
8	When braking, the towing vehicle and caravan remain in the lane	
9	Total height determined and noted. Keep the height information close at hand in the towing vehicle	

Water system housing body

10	Mobile waste water tank stored away and secured in the gas bottle compartment	
11	Water system emptied in case of risk of frost. Watertaps and drain cocks open	

Housing body, outside

12	Awning completely retracted	
13	Roof free of snow and ice (in winter)	
14	External connections and lines disconnected and stored away	
15	External supports removed	
16	Corner steadies and jockey wheel cranked as high as possible	
17	Wheel chocks removed and stored away	
18	Entrance step is stored securely or retracted	
19	External flaps closed and locked	
20	Conversion door locked	

Housing body, inside

21	Windows and skylights closed and locked	
22	Television removed from the support and securely stored	
23	Flat screen secured	
24	Television antenna retracted (if one is built in)	
25	Loose parts stored away or fixed in position	
26	Open storage spaces empty	
27	No gas cartridges or other easily flammable materials stored in the roof cupboard of the awning light	
28	Refrigerator door secured	

No.	Checks	Checked
29	Refrigerator set to 12 V operation	
30	All drawers and flaps closed	
31	Inner doors and table secured	
32	Pull-down bed secured	

Gas system

33	Gas bottles firmly fixed in the gas bottle compartment so that they are unable to turn	
34	Protective cap set on top of the gas bottle	
35	Regulator tap on the gas bottle and gas isolator taps are closed	

Chapter overview

This chapter contains instructions on how to drive the caravan.

The instructions address the following topics:

- driving speed
- brakes
- driving in reverse

4.1 Driving with the caravan



▶ During the journey, no persons are to travel inside the caravan.

▶ The caravan constructions were designed for a maximum permissible speed of 100 km/h (60 mph). Therefore never drive faster than 100 km/h (60 mph).

▶ Please always observe the speed limits in the individual countries (see chapter 17).

The main differences between driving with a caravan and driving without a caravan are the increased vehicle width and length, a decreased acceleration and an increased vehicle stopping distance. Therefore, adapt your driving technique to the altered road behaviour resulting from driving with a caravan.

4.2 Brakes



▶ Have defects on the braking system immediately remedied by an authorised specialist workshop.

Before each journey

Before each journey, check by means of a braking test:

- Does the overrun brake function?
- Do the brakes react evenly?
- Do the towing vehicle and the caravan remain in the lane when braking?

4.3 Driving in reverse



▷ When driving in reverse, the caravan reacts in exactly the opposite direction to the steering movements of the towing vehicle. If you steer the towing vehicle to the left, the caravan moves to the right.

▷ Never back up without a second person to direct you.

As far as all models with an automatic reverse driving mechanism are concerned, the caravan can be reversed without difficulty. In addition to the rolling resistance, residual braking power must be taken into account.

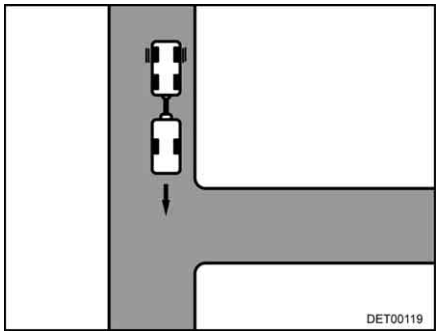

Fig. 13 Approach

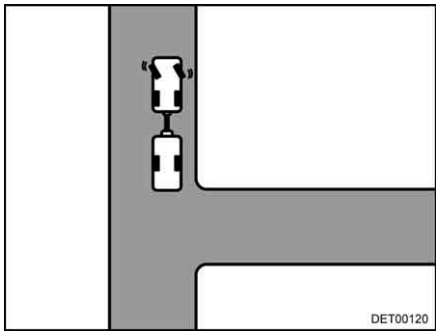

Fig. 14 Steer to the left

Driving in reverse:

- Drive up to the entrance until the rear of the caravan is roughly level with the entrance (Fig. 13).
- Steer the stationary towing vehicle and trailer to the left (Fig. 14).
- Reverse with caution. The caravan moves to the right.

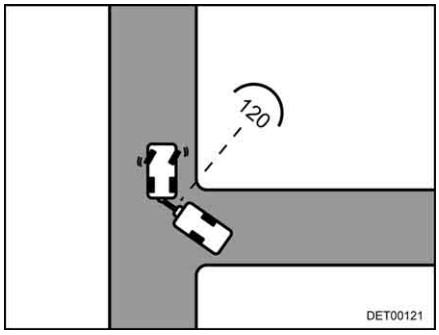

Fig. 15 Approach

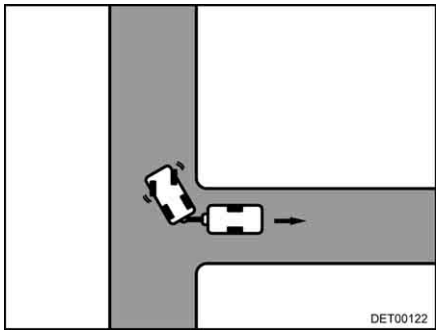

Fig. 16 Steer to the right



▷ The angle between the vehicles must not be too narrow, otherwise the corners will bump against each other. This can cause major damage to the vehicles. Get someone to direct you!

- As soon as both vehicles are at an approximate angle of 120° to each other, come to a stop (Fig. 15).
- Steer to the right and reverse with caution (Fig. 16).
- Continue to reverse, correcting the steering if necessary.
- For the last 2 to 3 m, steer to the left once more so that the towing vehicle and trailer are in line.

Chapter overview

This chapter contains instructions on how to pitch the vehicle.

The instructions address the following topics:

- handbrake
- wheel chocks
- operation of the supports
- entrance step
- mobile waste water tank
- 230 V connection
- refrigerator
- aligning the antenna

▷ Pitch the vehicle so that it is as horizontal as possible. Secure the vehicle to prevent it from rolling.

5.1 Handbrake

Firmly apply the handbrake when parking the vehicle.

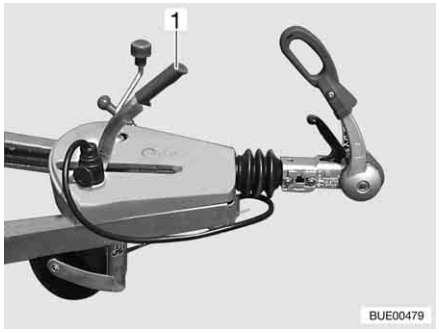

Fig. 17 Handbrake

To release it, push the handbrake (Fig. 17,1) forwards.

5.2 Wheel chocks

Use the two wheel chocks even when the upward or downward gradients are of a minimum.

5.3 Corner steadies

▷ Do not use the fitted corner steadies as a vehicle jack. The corner steadies are only for stabilising the pitched vehicle. The vehicle wheels are not to be raised above the ground.

▷ When pitching the vehicle, ensure that the corner steadies are evenly loaded.

▷ Before driving away, wind up the corner steadies as far as they can go.

▷ When the ground is soft, place a pad or block under the supports in order to prevent the vehicle from sinking into the ground.

In order to stabilise the pitched caravan use the corner steadies fitted as standard.

With the assistance of the jockey wheel position the pitched caravan in a horizontal position. For control purposes use a small spirit level.

Crank down the corner steadies after the caravan is in an absolutely horizontal position.

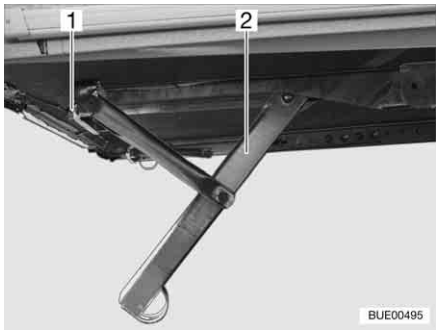

Fig. 18 Corner steady cranked down (variant 1)

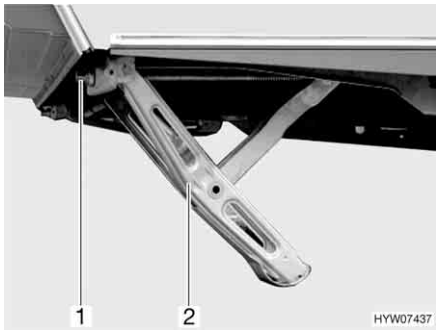

Fig. 19 Corner steady cranked down (variant 2)

Cranking down:

- Place the hand crank handle provided as standard on the hexagonal nut (Fig. 18,1 or Fig. 19,1) of the corner steady (Fig. 18,2 or Fig. 19,2).
- Rotate the hand crank in a clockwise direction.
  The corner steady is swung downwards.

Cranking upwards:

- Turn the crank handle in an anticlockwise direction.
  The corner steady is swung upwards.

5.4 Entrance step (free-standing)



- ▶ Make sure that the entrance step stands on secure and level ground. This will prevent the entrance step from toppling over.
- ▶ Do not step on the edges of the entrance step. Danger of slipping!
- ▶ Secure the entrance step to the ground, for example, with tent pegs. This way the entrance step cannot slip away.

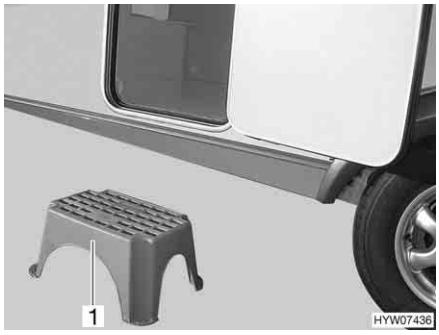

Fig. 20 Entrance step (free-standing)

- Place the entrance step (Fig. 20,1) in front of the entrance to the caravan.

5.5 Waste water tank, mobile (special equipment)

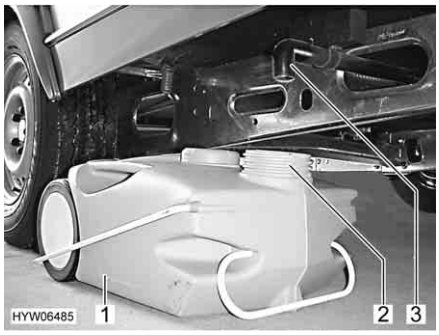

Fig. 21 Waste water tank, mobile

The waste water tank (Fig. 21,1) is stored inside the caravan gas bottle compartment during the journey. The drain pipe (Fig. 21,3) of the caravan is located at the bottom of the vehicle - on the left hand side in the direction of travel.

Before using the water system: Place the waste water tank under the caravan in such a way that the opening (Fig. 21,2) of the waste water tank is under the drain pipe.

5.6 230 V connection

The vehicle can be connected to a 230 V power supply (see chapter 8).

5.7 Refrigerator

The 12 V operation of the refrigerator is only possible when a towing vehicle is connected and the vehicle engine is running. When the vehicle engine is switched off, switch the refrigerator to 230 V operation or gas operation.

5.8 Satellite unit (special equipment)

▶ Before commencing the journey, ensure that the antenna is in park position. Danger of accidents!

▷ The vehicle must be still during the satellite search. Do not walk through the vehicle.

▷ Satellite reception is only possible, when the antenna is positioned in direct line of sight of the chosen satellite and the view is not blocked in any way.

▷ Also read the manufacturer's instruction manual.

5.8.1 Equipment with automatic antenna alignment

The satellite unit is equipped with an automatic positioning unit. This automatic positioning unit ensures that the antennas are precisely aligned to the desired satellites.

Operation is menu-controlled (TV screen) using the remote control.

Setting up the unit:

- Switch on the television.
- Use the mains switch to switch on the receiver.
- Press the "SEARCH" key on the remote control. The satellite antenna repositions itself out of the park position and into search mode.

When the system finds the last selected satellite, the last selected TV programme will appear automatically.

5.8.2 Equipment with semi-automatic antenna alignment

Switching on the satellite unit:

- Switch on the television and the receiver.
- On the electrical counter, press the "⇧" key longer than three seconds. The satellite antenna lifts out of the park position and moves to the last position entered.

Setting up the antenna:

- Correct the angle of the antenna with the keys "⇧" or "⇩" according to the enclosed cards.
- Loosen the antenna mast clamp.
- Turn the antenna slowly. When the antenna finds the satellite, you will hear a signal tone.
- Optimise the reception by turning and tilting the antenna.
- Slightly retighten the antenna mast clamp.

Lowering the antenna for driving:

- Loosen the antenna mast clamp.
- Turn the antenna until the slot in the clamp and in the antenna mast are exactly over each other.
- On the electrical counter, press the "⇩" button until "FE" appears in the display.
- Check whether the antenna is fully lowered and points to the rear of the vehicle.
- Slightly retighten the antenna mast clamp.
- Switch off the television and the receiver.

Chapter overview

This chapter contains instructions about living in the vehicle.

The instructions address the following topics:

- opening and closing the doors and external flaps
- light switches
- adjusting the halogen spotlights
- positioning the television
- heating the vehicle
- ventilation of the vehicle
- opening and closing the windows and blinds
- opening and closing the skylights
- converting tables
- use of the beds

6.1 Conversion door

▶ Only drive with locked doors.

▷ Locking the doors can prevent them from opening of their own accord, e.g. during an accident.

▷ Locked doors also prevent forced entry, e.g. when waiting at traffic lights.

▷ When leaving the vehicle, always lock the doors.

6.1.1 Conversion door, outside (two-part)

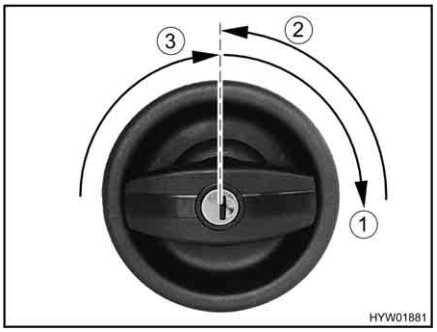

Fig. 22 Door lock of conversion door, outside, opening

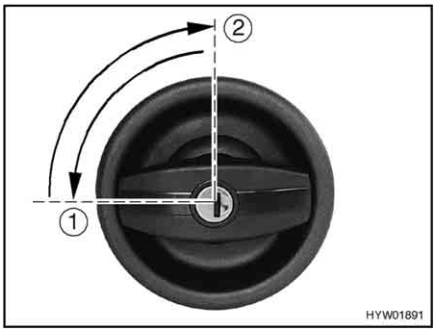

Fig. 23 Door lock of conversion door, outside, locking

Opening:

- Insert the key into locking cylinder and turn in a clockwise direction (Fig. 22,1) until the door lock is unlatched.
- Return the key to the central position (Fig. 22,2) and remove it.
- Turn the door knob in a clockwise direction (Fig. 22,3) until the door lock is unlatched.

Locking:

- Insert the key into locking cylinder and turn a quarter turn in an anticlockwise direction (Fig. 23,1).
- Return the key to the central position (Fig. 23,2) and remove it.

▷ For conversion doors with a left-hand opening, locking and opening is done in the reverse directions to those of the conversion door shown.

6.1.2 Conversion door, inside (two-part)

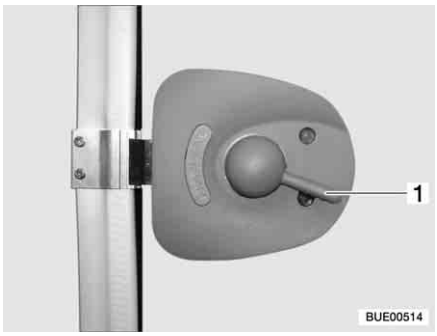

Fig. 24 Door lock of conversion door, inside, open

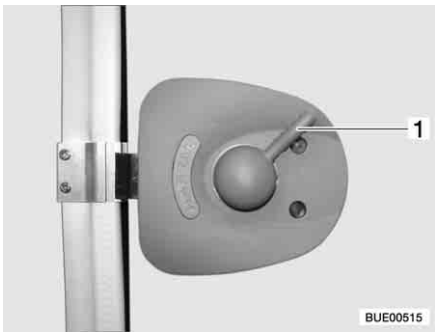

Fig. 25 Door lock of conversion door, inside, locked

Opening:

- Push the handle (Fig. 24,1) down.

Locking:

- Press the handle (Fig. 25,1) approx. 45° upward and leave it in this position.

6.1.3 Split conversion door

The split conversion door can be adjusted with the catch levers so that only the upper part of the door can be opened. The lower part of the conversion door remains locked.



Fig. 26 Catch lever on the lower part of the door

Opening the upper part of the door:

- Lock the lower part of the door. In order to carry this out turn catch lever (Fig. 26,1) a quarter turn in a clockwise direction.
- Open the upper part of the door.

▷ For conversion doors with a right-hand opening, locking and opening is done in the reverse directions to those of the conversion door shown.

6.1.4 Conversion door, outside (single-section)

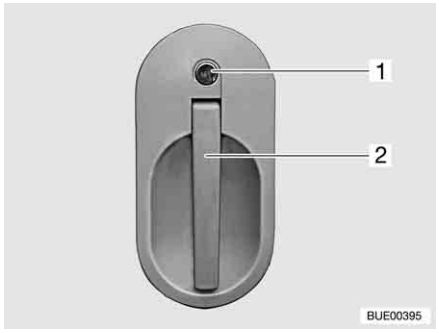

Fig. 27 Door lock of conversion door, outside

Opening:
- Insert the key into locking cylinder (Fig. 27,1) and turn until the door lock is unlatched.
- Return the key to the central position and remove it.
- Pull on the handle (Fig. 27,2). The door is open.

Locking:
- Insert the key into locking cylinder (Fig. 27,1) and turn until the door lock is engaged.
- Return the key to the central position and remove it.

6.1.5 Conversion door, inside (single-section)

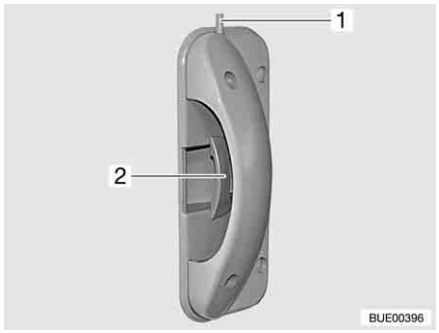

Fig. 28 Door lock of conversion door, inside

Opening:
- Push the handle (Fig. 28,2).

Locking:
- Push the knob (Fig. 28,1) down.

6.1.6 Window conversion door (single-section)

Depending on the model, the conversion door window is fitted with an insect screen and blind.

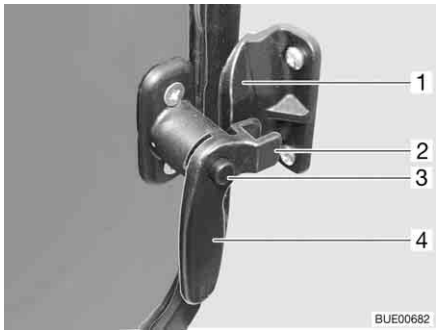

Fig. 29 Window in the conversion door, catch lever closed

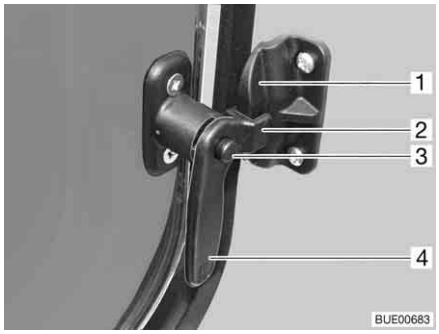

Fig. 30 Window in the conversion door in the "continuous ventilation" position

Opening the window:

- Press the safety knob (Fig. 29,3) down and hold it.
- Turn the catch lever (Fig. 29,4) towards the centre of the window.
- Open all locks.

Closing the window:

- Close the window.
- Press the safety knob (Fig. 29,3) down and hold it.
- Turn the catch lever (Fig. 29,4) towards the window frame. The fork (Fig. 29,2) is entirely on the inner side of the window catch (Fig. 29,1).

Continuous ventilation

With the catch levers you can put the window in the conversion door in the "continuous ventilation" position:

- Press the safety knob (Fig. 30,3) down and hold it.
- Turn the catch lever (Fig. 30,4) towards the centre of the window.
- Open all locks.
- Press the window in the conversion door slightly outward.
- Press the safety knob down and hold it.
- Return the catch lever to its initial position. Move the fork (Fig. 30,2) on the catch lever into the window catch (Fig. 30,1).

The window position "continuous ventilation" must not be kept during the journey.

If it rains, the "continuous ventilation" window position could lead to splashing water penetrating the living area. Therefore, close the windows completely.

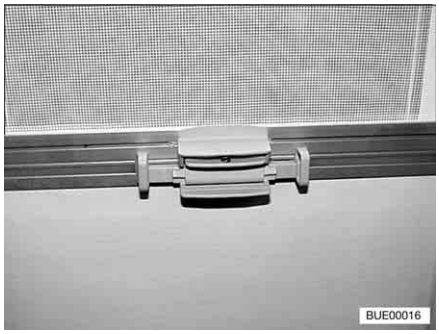

Fig. 31 Blind

Blind To close and open the blind:

Closing:
- Press the handle together and pull the blind from the bottom upward and lock it into place.

Opening:
- Press the handle together. The latch is released.
- Use handle to return the blind slowly to its initial position.

Insect screen To close and open the insect screen:

Closing:
- Grasp the bottom rod of the insect screen and guide it to the bottom rod of the blind.
- Lock catch in place.
- Continuous adjustment of the blinds may be made by moving the bottom rods.

▷ Once the blinds lock into place after you have moved them to the locking position, press the handle together to release the latch.

Opening:
- Hold the bottom rod of the insect screen and activate the catch.
- Return the bottom rod of the insect screen to the limit stop on the screen.

6.1.7 Insect screen on the conversion door (special equipment)

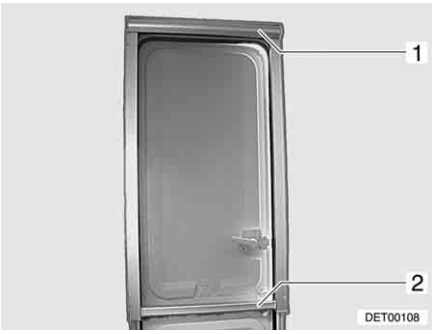

Fig. 32 Insect screen

The insect screen of the split conversion door is located in the upper blind box (Fig. 32,1).

Closing:
- Pull the insect screen down by the bar (Fig. 32,2) until it latches in place.

Opening:
- Press the bar (Fig. 32,2) down slightly, until the latch is released, then slowly guide the insect screen back into the blind boxes.

6.1.8 Folding insect screen on the conversion door (special equipment)

▷ Open the insect screen completely before closing the conversion door.



Fig. 33 Insect screen

Closing:
- Pull out the insect screen completely by the bar (Fig. 33,1).

Opening:
- Push the insect screen into its initial position by the bar (Fig. 33,1).

6.2 External flaps

▷ Before commencing the journey, close all external flaps and lock them.

▷ To open and close the external flap, open or close all locks that are fitted to the external flap.

▷ When leaving the vehicle, close all external flaps.

The external flaps fitted to the vehicle are all fitted with identical locking cylinders. Therefore, all locks can be opened with a single key.

6.2.1 Flap lock, elliptical-shaped

▷ During rain, water can penetrate the opened flap lock. Therefore close the lock handle.

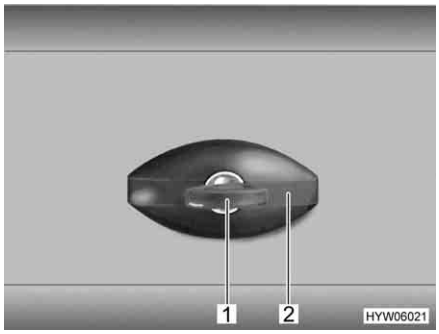

Fig. 34 Flap lock, elliptical-shaped, closed

Opening:
- Insert key into locking cylinder (Fig. 34,1) and turn a quarter turn in an anticlockwise direction. The lock handle (Fig. 34,2) snaps out.
- Remove the key.
- Turn lock handle one quarter turn in an anticlockwise direction. The flap lock is open.

Closing:

- Firmly close the external flap.
- Turn lock handle in a clockwise direction until it is horizontal. The flap lock is now engaged but not locked.
- Insert key into locking cylinder.
- Press down lock handle with key inserted and turn key a quarter turn in a clockwise direction. The lock handle will stay bolted.
- Remove the key.

6.2.2 Flap lock, rectangular

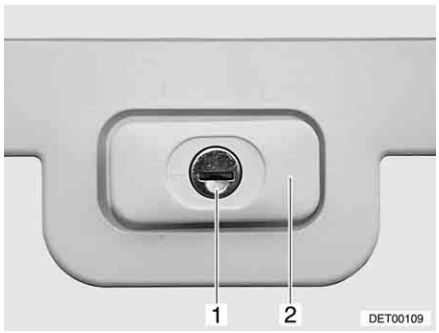

Fig. 35 Flap lock, rectangular, closed

Opening:

- Insert key into locking cylinder (Fig. 35,1) and turn a quarter turn. The lock handle (Fig. 35,2) snaps out.
- Remove the key.
- Turn the lock handle one quarter turn. The flap lock is open.

Closing:

- Firmly close the external flap.
- Turn lock handle until it is horizontal. The flap lock is now engaged but not locked.
- Insert key into locking cylinder.
- Press down lock handle with key inserted and turn key a quarter turn. The lock handle will stay bolted.
- Remove the key.

6.2.3 Flap for toilet cassette

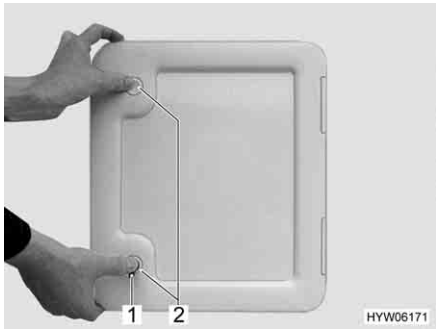

Fig. 36 Flap for toilet cassette

Opening:

- Insert key into locking cylinder (Fig. 36,1) of the push-button lock and turn a quarter turn.
- Remove the key.
- Press both push-button locks (Fig. 36,2) simultaneously with your thumb and open the flap for the toilet cassette.

Closing:

- Close the flap for the toilet cassette and press it shut.
- Insert key into locking cylinder (Fig. 36,1) and turn a quarter turn.
- Remove the key.

6.2.4 Flap for the 230 V connection, square

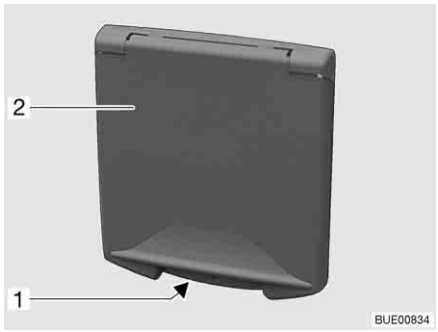

1 Recessed grip
2 External flap

Fig. 37 Flap for the 230 V connection

Opening:

- Reach into the recessed grip (Fig. 37,1) on the external flap (Fig. 37,2) and swing the external flap upward.

Closing:

- Swivel the external flap downwards and press it shut.

6.2.5 Cap for the drinking water filler neck (only for water tank 40 l)

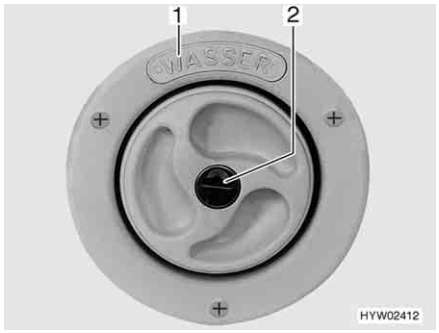

Fig. 38 Cap for the drinking water filler neck

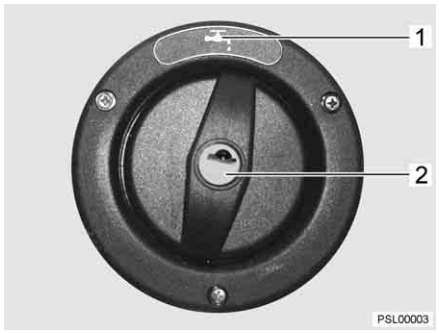

Fig. 39 Cap for the drinking water filler neck (alternative)

▷ The drinking water filler neck is labelled by the word "WASSER" (water) (Fig. 38,1) or marked by the symbol "" (Fig. 39,1).

Opening:
- Insert the key in the locking cylinder (Fig. 38,2 or Fig. 39,2) and turn it in an anticlockwise direction.
- Remove cap.

Closing:
- Insert the cap in the drinking water filler neck.
- Turn key in a clockwise direction.
- Remove the key.

6.3 Furniture flaps

▷ Before commencing the journey, close all furniture flaps and inner doors and lock them.

▷ The furniture flaps shown in this section are examples. Depending on the model, the locks and handles on the furniture flaps may differ to those displayed here.

6.3.1 Furniture flaps with push button



Fig. 40 Furniture flap with push button

Opening:
- Press inner part of the lock. The push button jumps out (Fig. 40).
- Hold push button and open furniture flap.

Closing:
- Press furniture flap shut.
- Press push button in until it locks. The furniture flap is closed correctly when the fastener locks into place.

6.3.2 Furniture flaps with handle

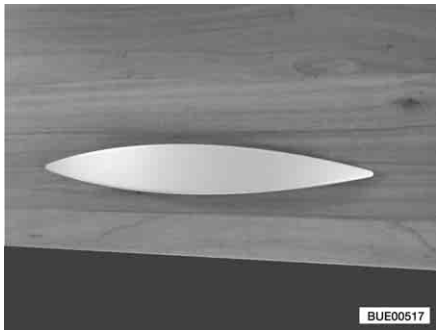

Fig. 41 Furniture flap with handle (example)

Opening:
- Pull handle (Fig. 41) until furniture flap is open.

Closing:
- Push down furniture flap until flap hinge perceptibly closes.

6.3.3 Furniture flaps with handle and push button

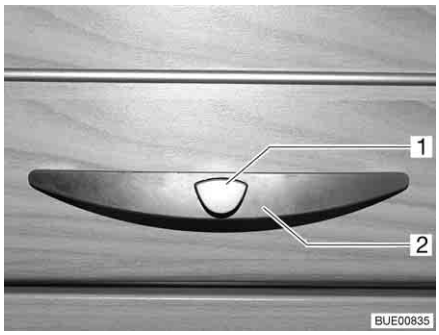

1 Release knob
2 Handle

Fig. 42 Furniture flap with handle (example)

Opening:
- Press the release knob (Fig. 42,1) on the handle (Fig. 42,2) and hold it down.
- Pull handle until furniture flap is open.

Closing:
- Press the furniture flap down until you can feel the flap hinge close and hear the lock snap into place.

6.4 Light switch

6.4.1 Entrance area

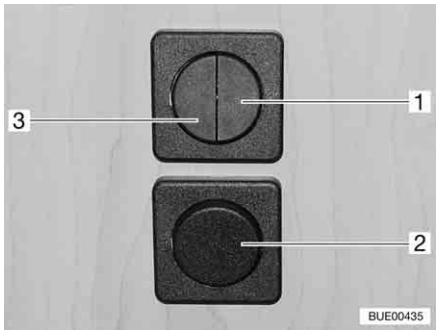

Fig. 43 Light switch



Fig. 44 Awning light

The entrance area has light switches for the following lamps:

- Seating group lighting (Fig. 43,1)
- Awning light (Fig. 43,2 and Fig. 43,3)

▷ For models without the light switch (Fig. 43,2) the awning light (Fig. 44) is switched on or off using the rocker switch (Fig. 43,3).

▷ The light switches have different layouts according to the model.

6.4.2 Interior

▷ The lamps shown in this section are examples. Not all lamps used in the vehicle are shown. The examples are intended to clarify the possible positions for the light switches. The type and appearance of the light switches can deviate from those shown here.



Fig. 45 Toilet compartment lighting, light switch directly on the lamp

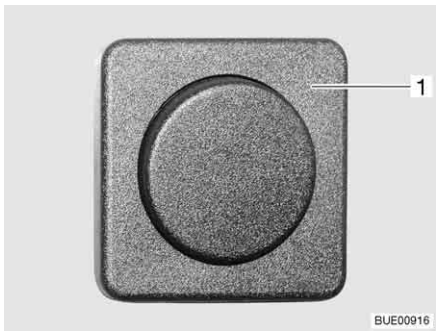

Fig. 46 Toilet compartment lighting, light switch separate from the lamp

Depending on the model, the light switches for the toilet compartment lighting are fitted at various points: Directly on the corresponding lamp (Fig. 45,1) or separate from the lamp below the toilet cabinet, underneath the wash basin or next to the entrance door (Fig. 46,1).

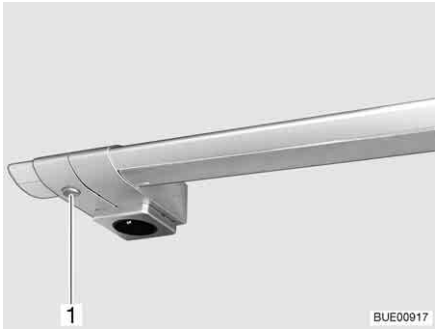

Fig. 47 Cooker lamp, light switch directly on the lamp

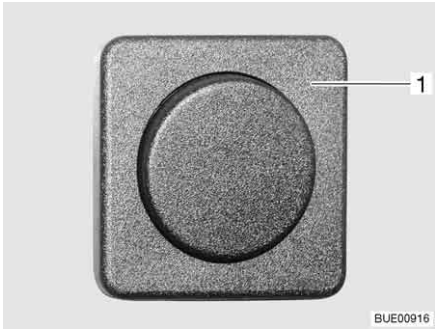

Fig. 48 Living area lamps, light switch separate from the lamp

The light switches in the living area are located directly on the corresponding lamp (Fig. 47,1) or in the seating group (Fig. 48,1) or the bed area.

6.5 Spotlight

- ▶ Bulbs and light fittings can be extremely hot.
- ▶ Allow the light bulbs and lamp holders to cool down before touching them.
- ▶ If the light is switched on or still hot, there must always be a safety distance of at least 30 cm between stores or curtains and flammable objects. Fire hazard!

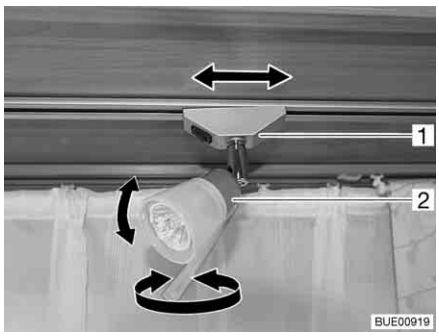

Fig. 49 Spotlight

Turning:

- ■ Grasp the housing (Fig. 49,2) and turn it.

The housing can be turned in different directions:

- ● To the left and to the right
- ● Up and down

Shifting:

- ■ Grip holder (Fig. 49,1) and turn by approx. 45°.
- ■ Push spotlight along the rail system to desired position.

Removal:

- ■ Grip holder (Fig. 49,1) and turn by approx. 90°.
- ■ Remove spotlight from rail.

The spotlight can be installed in any position into the rails.

6.6 Holder for flat screen

▶ Before commencing the journey, place and secure the flat screen and screen support in the initial position. If the screen holder is installed in a TV cabinet: Close TV cabinet.

▷ If there is a risk of frost, do not leave the flat screen television in the vehicle.

▷ Also read the manufacturer's instruction manual.

6.6.1 Holder on the column

The holder for the flat screen is attached to a column.

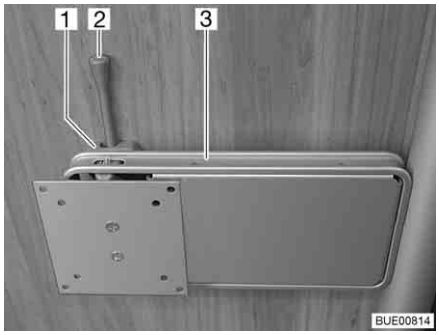

Fig. 50 Holder on the column

Positioning:

- Push the release lever (Fig. 50,2) to the side and turn the holder (Fig. 50,3) with the flat screen to the desired position.
- Press flat screen slightly upward and swivel it to the desired position. Three different inclination angles may be used.

Storing away:

- Turn flat screen back until the holder (Fig. 50,3) engages in the lock (Fig. 50,1).

6.6.2 Holder in the TV cabinet

The flat screen is attached to a console in the TV cabinet.

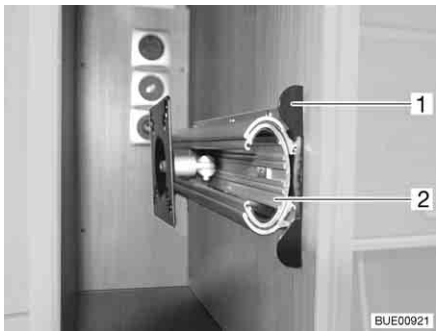

Fig. 51 Holder in the TV cabinet

Positioning:

- Push the unlocking bar (Fig. 51,1) in.
- Pull out the extension (Fig. 51,2) as far as possible.
- Swivel flat screen into the desired position.

Storing away:

- Swing back flat screen into its original position.
- Push in the extension (Fig. 51,2) until the unlocking bar (Fig. 51,1) engages.

6.7 Heating

▶ During heater operation, the exhaust gas pipe in the wardrobe will get hot. Therefore do not keep any heat-sensitive garments right next to the exhaust gas pipe (see also chapter 9).

▷ The operation of the heater is described in chapter 9.

6.8 Ventilation

▶ The oxygen in the vehicle interior is used up by breathing and the use of gas operated appliances. That is why the oxygen needs to be replaced on a constant basis. For this purpose, forced ventilation options (e.g. skylights with forced ventilation, mushroom-shaped vents or floor vents) are fitted to the vehicle. Never cover or block forced ventilations from the inside or outside with objects such as e.g. a winter mat. Keep forced ventilations clear of snow and leaves. There is a danger of suffocation due to increased CO_2 levels.

▷ Although sufficient ventilation is provided, in certain weather conditions, condensation can form on metal objects (e.g. screwed connections in the floor).

▷ Additional cold spots can occur at thermal "bridges" (e.g. lifting roof edges, mushroom-shaped vents, skylight edges, sockets, filler necks, flaps, etc.).

Condensation

Ensure that there is a continuous exchange of air by providing frequent and efficient ventilation. This is the only method for ensuring that condensation and resulting mould is not formed during cool weather. During the colder season, a pleasant living climate is created if heating output, air distribution and ventilation are synchronised.

If the vehicle is laid up for a longer period, occasionally ventilate it well, especially in summer as heat accumulation can occur. Do not only air the interior, but also the storage compartments which are accessible from the outside. Air the parking place as well if the vehicle is parked in a closed space (e.g. garage). The occurrence of condensation could lead to the formation of mould.

6.9 Windows



- ▷ The windows are fitted with a blind or Roman shade and with an insect screen or folding insect screen. After the latch has been released, the blind and insect screen automatically spring back to the initial position by tensile force. In order not to damage the tension mechanics, hold onto the blind or insect screen and allow it to slowly return to the initial position. The Roman shade and folding insect screen are made of thin woven fabric. In order not to damage the Roman shade or the insect screen, grasp the respective handle and carefully return it to the initial position.
- ▷ Do not keep blinds closed over a longer period of time as that can cause increased material wear.
- ▷ If the blind or the Roman shade is completely closed, exposure to direct sunlight can cause heat to accumulate between the blind/the Roman shade and the window. The window could be damaged.
  Therefore, if the shade is installed in the bottom blind box, close the shade only 2/3 when sunlight is intense. This allows the heat to escape between the window and the shade.
  If the shade is installed in the top blind box, close the shade fully and open it regularly.

  Also move the window into the "continuous ventilation" position.
- ▷ Before commencing the journey, close the windows.
- ▷ Depending on the weather, close the windows far enough to prevent moisture from entering.
- ▷ To open and close the window, open or close all catch levers which are fitted to the window.



- ▷ When leaving the vehicle, always close the windows.
- ▷ In extreme weather conditions or if the temperature fluctuates strongly, a light condensation film can form on the double-glazed acrylic glass. The glass is designed in such a way that condensation can evaporate when the external temperature increases. There is no danger of the double-glazed acrylic glass being damaged by condensation.

6.9.1 Hinged window with rotary hinges



- ▷ When opening the hinged windows, ensure that there are no torsional forces. Open and close the hinged windows evenly.

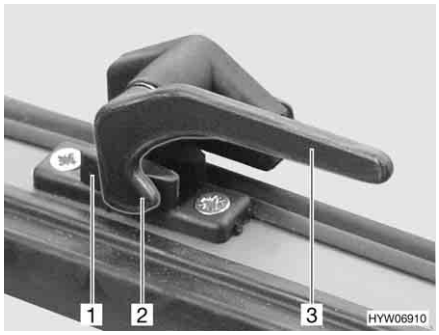

Fig. 52 Catch lever in "closed" position

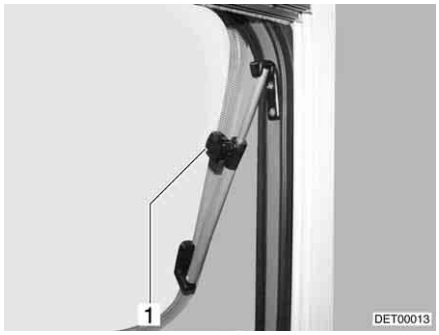

Fig. 53 Hinged window with rotary hinges, open

Opening:

- Turn the catch lever (Fig. 52,3) a quarter turn towards the centre of the window.
- Open the hinged window until the required position has been reached and use knurled knob (Fig. 53,1) to secure in position.

The hinged window remains locked in the required position.

Closing:

- Turn knurled knob (Fig. 53,1) until the latch is released.
- Close the hinged window.
- Turn the catch lever (Fig. 52,3) a quarter turn towards the window frame. The locking catch (Fig. 52,2) is located on the inside of the window catch (Fig. 52,1).

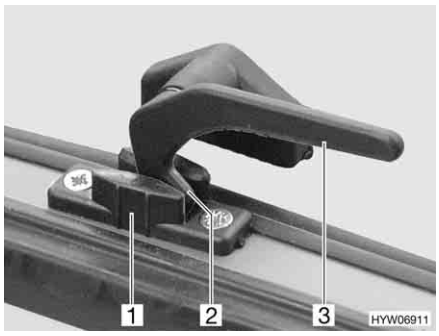

Fig. 54 Catch lever in the "continuous ventilation" position

Continuous ventilation

With the catch lever, the hinged window can be placed in 2 positions:

- "Continuous ventilation" (Fig. 54)
- Firmly closed (Fig. 52)

To place the hinged window into the "continuous ventilation" position:

- Turn the catch lever (Fig. 54,3) a quarter turn towards the centre of the window.
- Lightly open the hinged window outwards.
- Return the catch lever to its initial position. The locking catch (Fig. 54,2) has to be moved into the recess of window catch (Fig. 54,1).

During the journey, the hinged window may not be in "continuous ventilation" position.

If it rains, the "continuous ventilation" hinged window position could lead to splashing water penetrating the living area. Therefore, close the hinged windows completely.

6.9.2 Hinged window with automatic hinges



▷ Open the window completely, to release the lock. If the locking device is not released and the window is closed nevertheless, there is the danger of the window breaking due to the massive counter-pressure.

▷ When opening the hinged windows, ensure that there are no torsional forces. Open and close the hinged windows evenly.

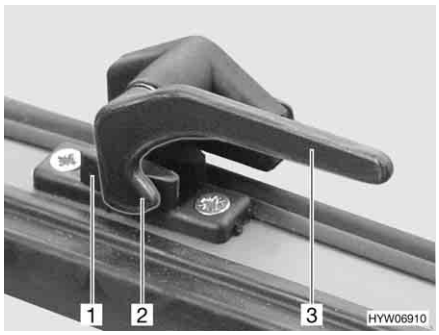

Fig. 55 Catch lever in "closed" position

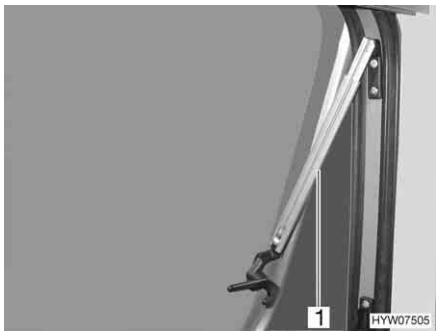

Fig. 56 Hinged window with automatic hinges, open

Opening:

- Turn the catch lever (Fig. 55,3) a quarter turn towards the centre of the window.
- Open the hinged window to the desired latched position. The automatic hinge (Fig. 56,1) locks in place automatically.

The hinged window remains locked in the required position.

Closing:

- Open the hinged window as wide as necessary until the latch releases.
- Close the hinged window.
- Turn the catch lever (Fig. 55,3) a quarter turn towards the window frame. The locking catch (Fig. 55,2) is located on the inside of the window catch (Fig. 55,1).

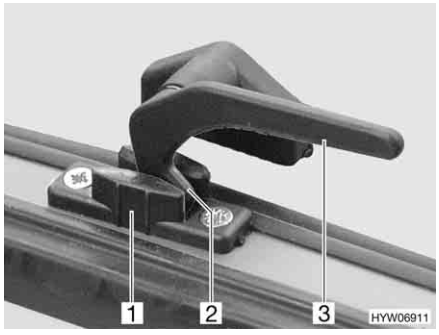

Fig. 57 Catch lever in the "continuous ventilation" position

Continuous ventilation

With the catch lever, the hinged window can be placed in two positions:

- "Continuous ventilation" (Fig. 57)
- Firmly closed (Fig. 55).

To place the hinged window into the "continuous ventilation" position:

- Turn the catch lever (Fig. 57,3) a quarter turn towards the centre of the window.
- Slightly open the hinged window outwards.
- Turn the catch lever a quarter turn towards the window frame. The locking catch (Fig. 57,2) has to be moved into the recess of window catch (Fig. 57,1).

During the journey, the hinged window may not be in "continuous ventilation" position.

If it rains, the "continuous ventilation" hinged window position could lead to splashing water penetrating the living area. Therefore, close the hinged windows completely.

6.9.3 Blind and insect screen

▷ Open blinds before commencing the journey. When the blinds are closed, vibrations can damage the spring shaft.

▷ Depending on the window size, the blinds are fitted with one or two handles.

The windows are fitted with a blind and an insect screen. The blind and insect screen are adjusted separately.

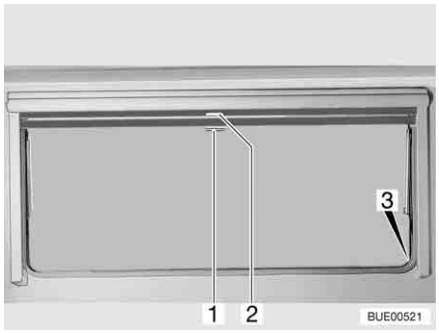

Fig. 58 Hinged window

Blind The blind is located in the upper blind box.

Closing:
- Pull blind at the handle (Fig. 58,2) downwards. If the blind is to be completely closed, it is suspended into the locking devices (Fig. 58,3) situated on both sides of the window frame.

Opening:
- If the blind is completely closed: Press handle (Fig. 58,2) downwards and, at the same time, tilt it slightly inward. The blind can be taken out of the locking devices situated on both sides of the window frame.
- If the blind is in an intermediate position: Pull the handle (Fig. 58,2) slightly downwards until the locking device releases.
- Use handle to return blind slowly to its initial position.

Insect screen The insect screen is located in the upper blind box.

Closing:
- Pull insect screen at the handle (Fig. 58,1) down and hang it into the locking devices (Fig. 58,3) situated on both sides of the window frame.

Opening:

- Press handle (Fig. 58,1) downwards and, at the same time, tilt it slightly inward. The insect screen can be taken out of the locking devices situated on both sides of the window frame.
- Use handle to return the insect screen slowly to its initial position.

6.10 Skylights

Depending on the model, skylights with or without forced ventilation are fitted to the vehicle. If a skylight is fitted without forced ventilation, the forced ventilation is performed using mushroom-shaped vents.



▶ The apertures for forced ventilation must always be kept open. Never cover or block forced ventilations with objects such as e.g. a winter mat. Keep forced ventilations clear of snow and leaves.



▷ The skylights are fitted with a blind or Roman shade and with an insect screen or folding insect screen. After the latch has been released, the blind and insect screen automatically spring back to the initial position by tensile force. In order not to damage the tension mechanics, hold onto the blind or insect screen and allow it to slowly return to the initial position. The Roman shade and folding insect screen are made of thin woven fabric. In order not to damage the Roman shade or the insect screen, grasp the respective handle and carefully return it to the initial position.

▷ Do not keep blinds closed over a longer period of time as that can cause increased material wear.

▷ If the blind or the Roman shade is completely closed, exposure to direct sunlight can cause heat to accumulate between the blind/the Roman shade and the skylight. The skylight could be damaged. For that reason, close the blind/Roman shade only 2/3 of the way in direct sunlight. Open the skylight slightly or move it to ventilation position.

▷ Depending on the weather, close the skylights far enough to prevent moisture from entering.

▷ Do not climb on the skylights.

▷ Before commencing the journey, close the skylights.

▷ Before commencing the journey, check that the skylights are closed and locked.



▷ When leaving the vehicle, always close the skylights.

6.10.1 Heki skylight (mini and midi) (partially special equipment)

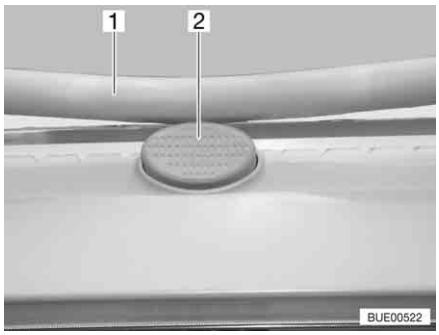

Fig. 59 Safety knob on the Heki skylight

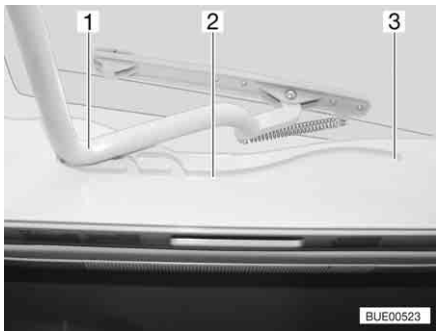

Fig. 60 Heki skylight, guide

The Heki skylight is opened on one side only.

Opening:

- Press the safety knob (Fig. 59,2) and pull the bar (Fig. 59,1) down with both hands.
- Pull the bar (Fig. 60,1) in the guides (Fig. 60,2) to the rearmost position (Fig. 60,3).

Closing:

- Use both hands to push the bar (Fig. 60,1) slightly upwards.
- Push the bar back in the guides.
- Push the bar upwards with both hands until it is above the safety knob (Fig. 59,2).

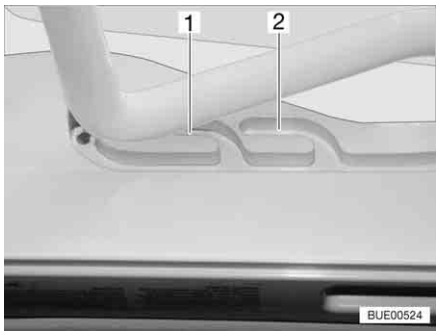

Fig. 61 Heki skylight in ventilation position

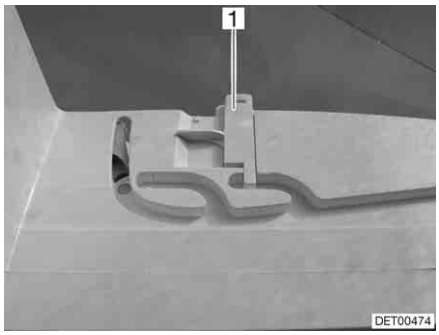

Fig. 62 Ventilation position locking mechanism

Ventilation position

The Heki skylight can be put in two ventilation positions: Bad weather position (Fig. 61,1) and central position (Fig. 61,2). Depending on the model, the skylight can be locked in the central position with the latch (Fig. 62,1).

- Press the safety knob (Fig. 59,2) and pull the bar (Fig. 59,1) down with both hands.
- Pull the bar in the guides (Fig. 60,2) to the desired position.
- Push the bar slightly upwards and into the selected guide (Fig. 61,1 or 2) and lock if necessary.

Roman shade

To close and open the Roman shade:

Closing:

- Pull out Roman shade at the handle and release in the required position. The Roman shade will stay in that position.

Opening:

- Slowly push the Roman shade at the handle to its initial position.

Insect screen

To close and open the insect screen:

Closing:

- Pull the insect screen by the handle to the opposite handle of the Roman shade.

Opening:

- Press the rear part of the handle of the insect screen. The latch is released.
- Use handle to return the insect screen slowly to its initial position.

6.10.2 Heki skylight (special equipment)

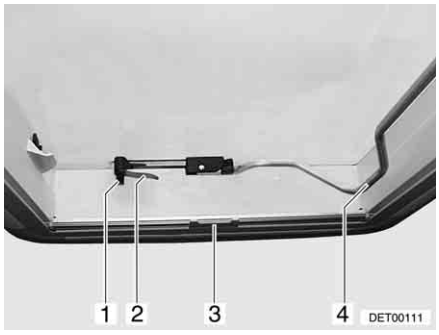

Fig. 63 Heki skylight, closed

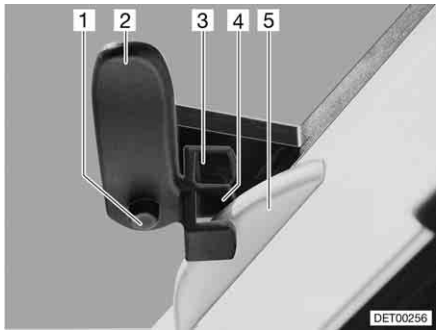

Fig. 64 Heki skylight in ventilation position 1

The Heki skylight may be opened on one side only.

Opening:

- Press the safety knob (Fig. 63,1) and turn the catch lever (Fig. 63,2) one quarter turn inward.
- Pull the bar (Fig. 63,4) downwards out of the latch.
- Press the Heki skylight upwards using the bar.
- Press the bar back into the latch.

Closing:

- Pull the bar (Fig. 63,4) downwards out of the latch.
- Pull the Heki skylight downward using the bar.
- Turn the catch lever (Fig. 63,2 and Fig. 64,2) one quarter turn. The hook of the roof lock (Fig. 64,5) must engage in the upper locking fork (Fig. 64,3).
- Press the bar back into the latch.

Ventilation position (variant 1):

- Open Heki skylight and push lightly outwards.
- Press the safety knob (Fig. 64,1) and turn the catch lever (Fig. 64,2) back. The hook of the roof lock (Fig. 64,5) must engage in the lower locking fork (Fig. 64,4).
- Press the bar back into the latch.

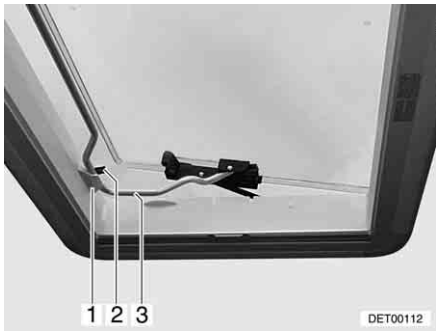

Fig. 65 Heki skylight in ventilation position 2

Ventilation position (variant 2):

- Open Heki skylight.
- Insert the bar (Fig. 65,3) into the holder (Fig. 65,1).
- Place the lever (Fig. 65,2) over the bar.

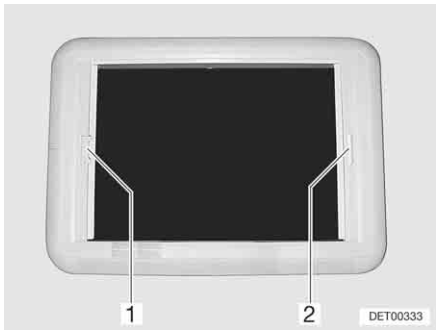

Fig. 66 Heki skylight, blind lock

Blind To close and open the blind:

Closing:

- Pull blind at the handle (Fig. 66,2) to the opposite handle of the insect screen (Fig. 66,1) and allow to engage.

Opening:

- Hold the blind screen by the handle with one hand.
- With your other hand, push the unlocking bar on the handle of the insect screen (Fig. 66,1) towards the handle. The lock is released.
- Use handle to return the blind slowly to its initial position.

Insect screen To close and open the insect screen:

Closing:

- Pull insect screen at the handle (Fig. 66,1) to the opposite handle of the blind (Fig. 66,2) and allow to engage.

Opening:

- Hold the insect screen (Fig. 66,1) by the handle and push the unlocking bar towards the handle. The lock is released.
- Use handle to return the insect screen slowly to its initial position.

6.11 Tables

6.11.1 Suspension table with folding leg

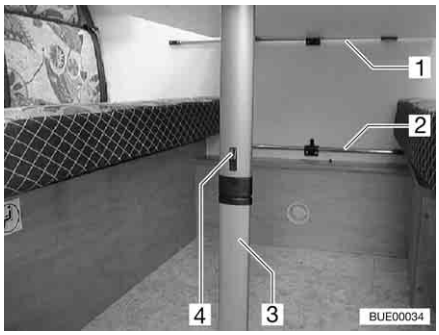

Fig. 67 Suspension table with folding leg

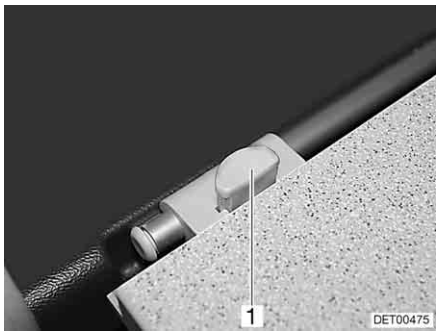

Fig. 68 Table-top lock (variant)

The suspension table may also be used as a bed foundation.

Conversion to bed foundation:

- Slightly lift the front of the table-top.
- Move the locking device (Fig. 67,4) toward the table-top.
- Fold the lower section of the foot (Fig. 67,3) under by 90°.
- When there is a lock: Press the release knob (Fig. 68,1) on the lock of the table top.
- Detach the suspension table from the upper attachment rail (Fig. 67,1).
- Attach the suspension table to the lower attachment rail (Fig. 67,2) and rest it onto the table leg hinge.
- When there is a lock: Lock the table top.

6.11.2 Swivel table



▷ Reduce the size of the swivel table before commencing the journey.

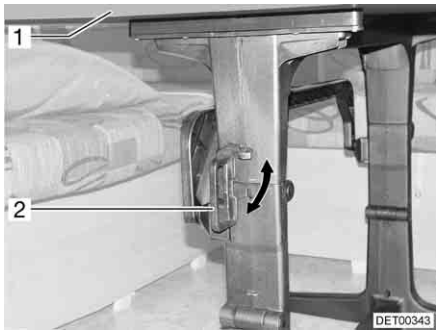

Fig. 69 Swivel table

The swivel table's swivel mechanism enables it to be used as a bed foundation.

Conversion to bed foundation:

- Rotate the handle (Fig. 69,2) into the horizontal position.
- Swivel the table-top (Fig. 69,1) downward in a circular movement.
- Turn the handle back to the vertical position. The swivel mechanism is locked.

6.11.3 Suspension table and swivel table

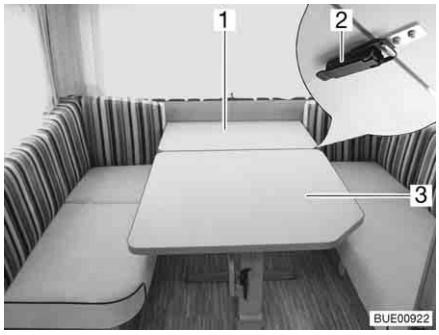

Fig. 70 Suspension table and swivel table



Fig. 71 After conversion to round seating group

The combination consisting of suspension table and swivel table can be converted into a round seating group.

Conversion to round seating group:

- Open two locks (Fig. 70,2) on the underside of the table top.
- Pull swivel table (Fig. 70,3) slightly toward the centre.
- Lift the table-top of the suspension table (Fig. 70,1) approx. 45°.
- Pull lower section of the suspension table foot downwards and fold over by 90°.
- Remove the suspension table from its upper retainer.
- Hook suspension table into the lower retainer and use the foot to place on the ground.
- Place additional cushions.
- Push swivel table to the rear again (Fig. 71).

6.11.4 Lift-off table, movable

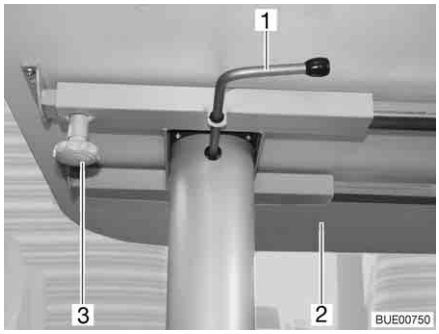

Fig. 72 Lift-off table, movable

The top of the lift-off table can be moved.

Moving the table-top:

- Loosen knurled screw (Fig. 72,3).
- Move table-top (Fig. 72,2) to the desired position.
- Retighten the knurled screw.

The table's lifting mechanism enables it to be also used as a bed foundation.

Conversion to bed foundation:

- Swivel the catch lever (Fig. 72,1) to the left. The lock of the lifting mechanism is open.
- Press table-top (Fig. 72,2) in the middle down to the stop limit and hold it down.
- Swivel the catch lever (Fig. 72,1) to the right (Fig. 72). The lifting mechanism is locked.

Conversion to table:

- Swivel the catch lever (Fig. 72,1) to the left. The lock of the lifting mechanism is open. The table-top moves upwards to the limit stop.
- Swivel the catch lever to the right (Fig. 72). The lifting mechanism is locked.

6.12 Beds

6.12.1 Bunk bed



- ▶ Only use the bunk bed, if the safety net is set up.
- ▶ The maximum permitted bunk bed load is 100 kg.
- ▶ Never allow small children to remain in the bunk bed without supervision.
- ▶ But in particular with regard to small children less than 6 years of age, users should ensure that they cannot fall out of the bunk bed.
- ▶ Use separate children's beds or travel cots suitable for children.

Depending on the model, the vehicle is fitted with a bunk bed. The bunk bed can be used immediately, without additional conversion.

Always use the access ladder provided to climb up to the top bed.

6.12.2 Fixed bed (manual setup)



- ▶ Do not let the slatted frame fall down when closing the bed!

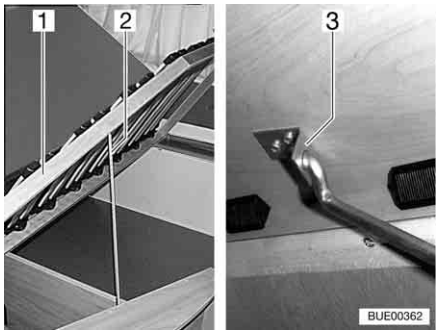

Fig. 73 Fixed bed

The bedding box is located underneath the bed. The bedding box may be used to store bedding.

Fold up the slatted frame to place items in the bedding box or to empty it.

Depending on the model, a rail has been fitted to the slatted frame to set it up.

Opening:

- Lift the slatted frame (Fig. 73,1), release the rail (Fig. 73,2) from its bracing and insert into the cavity in the holder (Fig. 73,3).

Closing:

- Lift the slatted frame (Fig. 73,1), release the rail (Fig. 73,2) from the holder (Fig. 73,3) and clamp into the bracing.
- Carefully let go of the slatted frame.

6.12.3 Fixed bed (gas-pressure springs)

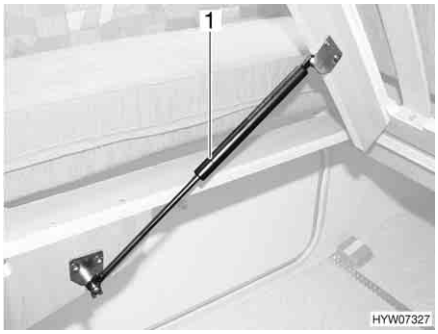

Fig. 74 Fixed bed

A storage compartment is underneath the bed. Lift up the slatted frame to place items in the storage compartment or to empty it from the inside of the vehicle.

Opening:

- Lift the mattress forwards and set it down on the panel.
- Lift slatted frame. The gas-pressure springs (Fig. 74,1) hold the slatted frame open.

Closing:

- Press the slatted frame downwards against the resistance of the gas-pressure springs.
- If necessary, push the mattress behind the panel.

6.12.4 Pull-down bed (Averso Plus)



- ▶ Switch off the reading lamps in the pull-down bed before the bed is pushed up. Fire hazard!
- ▶ Switch off the reading lamps on the underside of the pull-down bed when the bed is lowered. Fire hazard!
- ▶ The maximum permitted pull-down bed load is 200 kg.
- ▶ The pull-down bed is not to be used for the storage of luggage. When the bed is not being used, only place the bed linen which is required for two persons in it.
- ▶ Before commencing the journey, secure the pull-down bed. To do this, lock the pull-down bed.
- ▶ Only use the pull-down bed, if the safety net is set up.
- ▶ Never allow small children to remain in the pull-down bed without supervision.

- ▶ But in particular with regard to small children less than 6 years of age, users should ensure that they cannot fall out of the pull-down bed.
- ▶ Use separate children's beds or travel cots suitable for children.

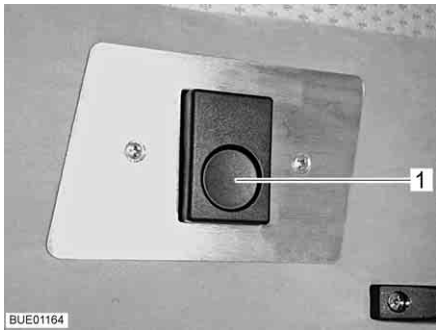

Fig. 75 Release

The pull-down bed is located above the rear seating group.

Opening the pull-down bed:

- ■ Push the release knob (Fig. 75,1). The lock is released.
- ■ With both hands, pull the pull-down bed down as far as it will go.

▷ When closing the pull-down bed, pull the side fabric panels inwards. This prevents the fabric from getting trapped in the lock of the pull-down bed.

Closing the pull-down bed:

- ■ Use both hands to push pull-down bed upwards as far as it will go. When doing this, ensure that the snap latch engages audibly in the locking bracket.
- ■ Check that the pull-down bed is locked correctly. To do this, pull down the pull-down bed firmly.

▷ Depending on the model, the pull-down bed is equipped with a one-piece or two-piece safety net.

Safety net

The safety net and the retaining belts are located underneath the mattress in the pull-down bed. Only use the safety net if persons are already in the pull-down bed.

Setting up:

- ■ Attach the retaining belts to the hooks on the ceiling.

6.12.5 Pull-down bed, electrically operated (Averso Plus) (special equipment)

- ▶ Switch off the reading lamps in the pull-down bed before the bed is pushed up. Fire hazard!
- ▶ Switch off the reading lamps on the underside of the pull-down bed when the bed is lowered. Fire hazard!
- ▶ Do not reach into the area between the bed and the side wall when lowering or raising. Danger of bruises!
- ▶ Only lower or raise the bed when there are no loads on it.
- ▶ Only lower the bed if the lowering area is clear.

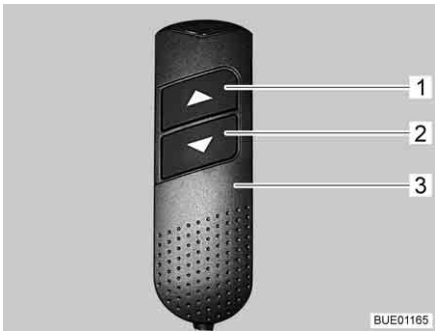

Fig. 76 Manual control unit

Making ready for operation

After every power interruption (e.g. lay-up over winter), the electrical drive must be made ready for operation again. To do this, proceed as follows:

- On the manual control unit (Fig. 76,3) press both arrow keys (Fig. 76,1 and 2) simultaneously and keep them pressed until the pull-down bed has moved fully up or down and there is an audible beep tone.

Opening the pull-down bed:

- On the manual control unit (Fig. 76,3), press the bottom arrow key (Fig. 76,2) and keep it pressed until the pull-down bed has moved down into its end position.

Closing the pull-down bed:

- On the manual control unit (Fig. 76,3), press the top arrow key (Fig. 76,1) and keep it pressed until the pull-down bed has moved up into its end position.

Overload protection

If the pull-down bed meets an obstacle during opening of closing (e.g. a person or a headrest), the overload protection stops the movement. The pull-down bed cannot be moved further until after the overload protection has been reset.

Performing a reset

Reset will take place automatically.

- After resetting, use the arrow key (Fig. 76,1 or 2) to move the pull-down bed in the opposite direction as far as the end position.

▷ Depending on the model, the pull-down bed is equipped with a one-piece or two-piece safety net.

Safety net

The safety net and the retaining belts are located underneath the mattress in the pull-down bed. Only use the safety net if persons are already in the pull-down bed.

Setting up:

- Attach the retaining belts to the hooks on the ceiling.

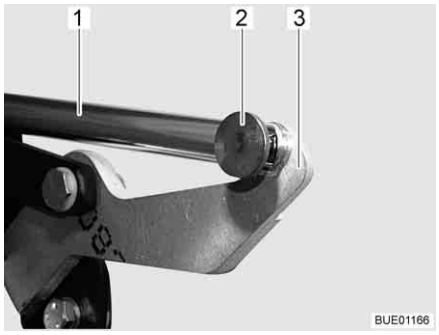

Fig. 77 Drive

Emergency operation

If the pull-down bed can no longer be moved via the manual control unit (e.g. due to loss of the vehicle's power supply), it can also be operated manually. To do this, proceed as follows:

- Remove the connection (e.g. splint and pin) (Fig. 77,2) between the push rod (Fig. 77,1) and lever (Fig. 77,3).
- Open or close the pull-down bed manually.
- Contact customer service.

6.12.6 Widening single beds (special equipment)

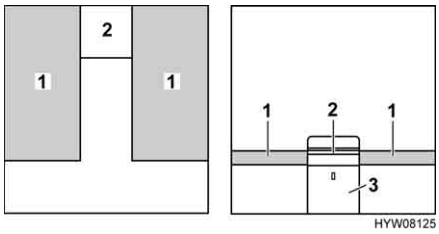

1 Mattress
2 Bedside locker cover
3 Bedside locker extension
4 Slatted frame
5 Additional cushion
6 Additional cushion

Fig. 78 Prior to conversion

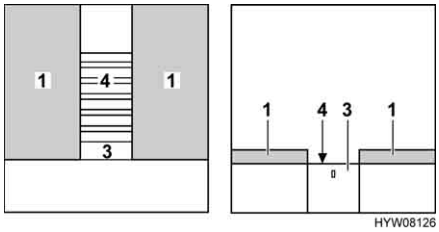

Fig. 79 During conversion

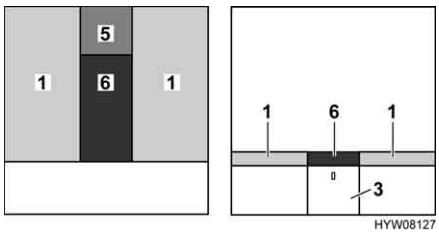

Fig. 80 After conversion

- Remove the bedside locker cover (Fig. 78,2) and put it to one side.
- Pull out slatted frame (Fig. 79,4) completely. To do this, pull on the extension (Fig. 79,3).

- Place the additional cushion (Fig. 80,5) on the bedside locker.
- Place the additional cushion (Fig. 80,6) between the mattresses (Fig. 80,1).

6.13 Converting seating groups for sleeping

6.13.1 Bench and central seating group without additional cushion

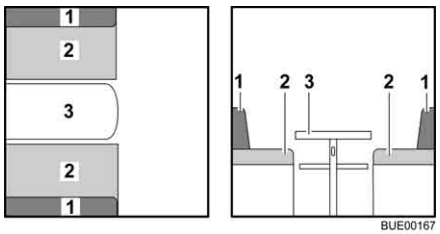

1 Back cushion
2 Seat cushion
3 Table

Fig. 81 Prior to conversion

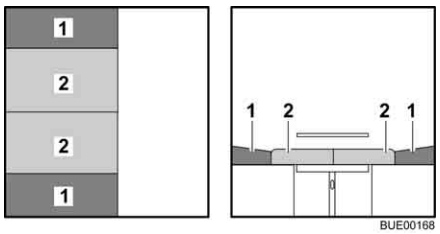

Fig. 82 After conversion

- Convert the table (Fig. 81,3) to a bed foundation (see section 6.11).
- Pull the seat cushions (Fig. 82,2) into the centre.
- Insert the back cushions (Fig. 82,1) between the seat cushions and the wall.

6.13.2 Bench and central seating group with additional cushion

▷ Depending on the model, the seating group can be different in shape and position to the one shown here.

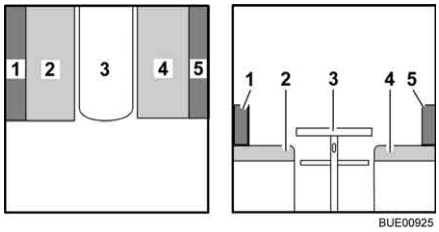

1 Back cushion
2 Seat cushion
3 Table
4 Seat cushion
5 Back cushion
6 Additional cushion (basic)

Fig. 83 Prior to conversion

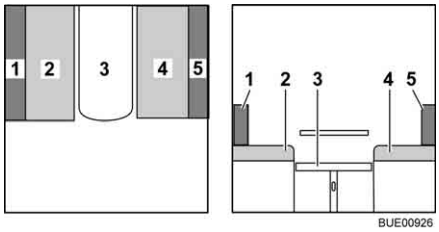

Fig. 84 During conversion

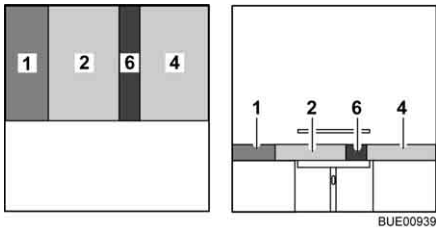

Fig. 85 After conversion

- Convert the table (Fig. 83,3) to a bed foundation (see section 6.11).
- Remove the back cushion (Fig. 84,5) and lay it aside.
- Pull the seat cushion (Fig. 84,2) into the middle.
- Place the back cushion (Fig. 85,1) between the seat cushion and the wall.
- Place the additional cushion (Fig. 85,6) between the seat cushions (Fig. 85,2 and 4).

6.13.3 Round seating group

▷ Depending on the model, the seating group can be different in shape and position to the one shown here.

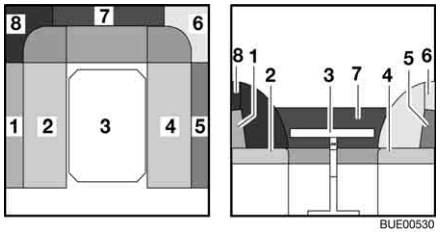

1 Back cushion
2 Seat cushion
3 Table
4 Seat cushion
5 Back cushion
6 Back cushion
7 Back cushion
8 Back cushion
9 Additional cushion

Fig. 86 Prior to conversion

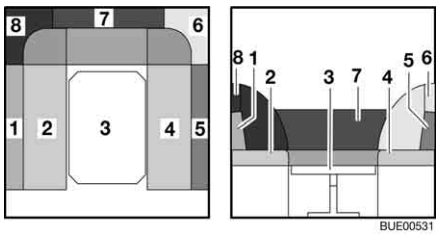

Fig. 87 During conversion

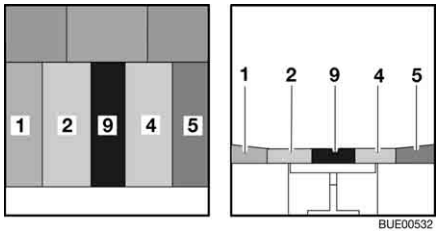

Fig. 88 After conversion

- Convert the table (Fig. 86,3) to a bed foundation (see section 6.11).
- Pull the seat cushions (Fig. 87,2 and 4) into the centre.
- Insert the back cushions (Fig. 87,1 and 5) between the seat cushions and the exterior wall
- Remove the back cushions (Fig. 87,6, 7 and 8) and lay them aside.
- Place the additional cushion (Fig. 88,9) between the seat cushions (Fig. 88,2 and 4).

6.13.4 Round seating group with bed widening

▷ Depending on the model, the seating group can be different in shape and position to the one shown here.

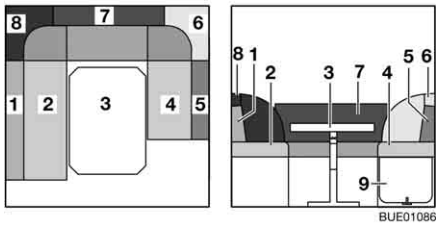

Fig. 89 Prior to conversion

1 Back cushion
2 Seat cushion
3 Table
4 Seat cushion
5 Back cushion
6 Back cushion
7 Back cushion
8 Back cushion
9 Bedding box extension
10 Support
11 Additional cushion
12 Additional cushion

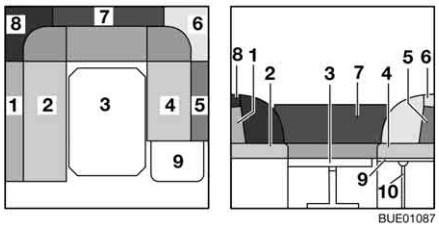

Fig. 90 During conversion

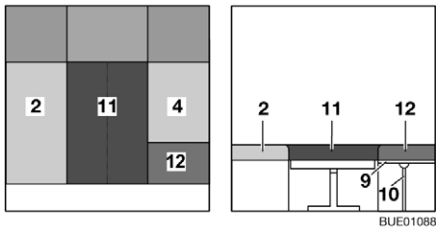

Fig. 91 After conversion

- Convert the table (Fig. 89,3) to a bed foundation (see section 6.11).
- Unlatch and fold up the bedding box extension (Fig. 89,9).
- Place support (Fig. 90,10) into the holder on the bedding box extension.
- Remove the back cushions (Fig. 90,1, 5, 6, 7 and 8) and lay them aside.
- Place the additional cushion (Fig. 91,11) between the seat cushions (Fig. 91,2 and 4).
- Lay the additional cushion (Fig. 91,12) on the bedding box extension (Fig. 91,9).

6.13.5 Widening the bed into a laying area (special equipment)

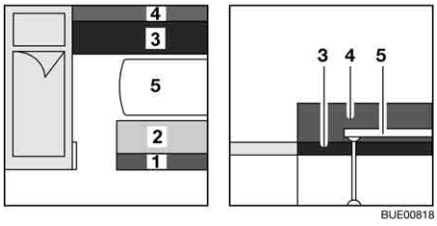

1 Back cushion
2 Seat cushion
3 Seat cushion
4 Back cushion
5 Table
6 Additional board
7 Additional board
8 Bench seat
9 Additional cushion
10 Additional cushion

Fig. 92 Prior to conversion

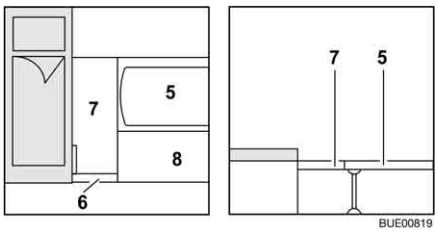

Fig. 93 During conversion

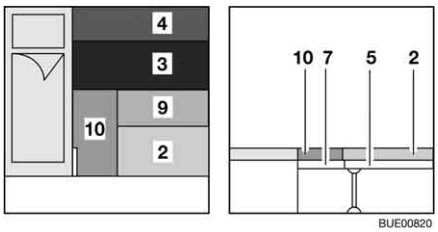

Fig. 94 After conversion

- Convert the table (Fig. 92,5) to a bed foundation (see section 6.11).
- Remove the back cushions (Fig. 92,1 and 4) and the seat cushions (Fig. 92,2 and 3).
- Secure and unfold the additional board (Fig. 93,6) with the rail hinge on the bench seat (Fig. 93,8).
- Place additional board (Fig. 93,7) on top.
- Place the seat cushion (Fig. 94,3) in the centre.
- Insert the back cushion (Fig. 94,4) between the seat cushion (Fig. 94,3) and the wall.
- Place the seat cushion (Fig. 94,2) against the wall.
- Place the additional cushion (Fig. 94,9) between the seat cushions.
- Lay the additional cushion (Fig. 94,10) next to the bed.

Chapter overview

This chapter contains instructions regarding the gas system of the vehicle.

The instructions address the following topics:

- safety
- changing the gas bottles
- gas isolator taps
- external gas connection
- automatic switching facility
- the gas alarm system

The operation of the gas operation appliances of the vehicle is described in chapter 9.

7.1 General



- ▶ Before commencing the journey, when leaving the vehicle or when gas equipment is not in use, close all gas isolator taps and the main isolator tap on the gas bottle.
- ▶ No appliance operated by a naked flame (e.g. heater or refrigerator) may be in operation when filling the tank, on ferries or in the garage. Danger of explosion!
- ▶ Do not use appliances operated with a naked flame in closed spaces (e.g. garages). Danger of poisoning and suffocation!
- ▶ Only have the gas system maintained, repaired or altered by an authorised specialist workshop.
- ▶ Have the gas system checked by an authorised specialist workshop according to the national regulations before commissioning. This also applies for not registered vehicles. For modifications to the gas system have the gas system immediately checked by an authorised specialist workshop.
- ▶ The gas pressure regulator and exhaust gas pipes must also be inspected. The gas pressure regulator has to be replaced after 10 years at the latest. The vehicle owner is responsible for seeing that this is carried out.
- ▶ In case of a defect of the gas system (gas odour, high gas consumption) there is danger of explosion! Close regulator tap on the gas bottle immediately. Open doors and windows and ventilate well.
- ▶ If the gas system is defective: Do not smoke; do not ignite any open flames, and do not operate electric switches (light switches etc.).
- ▶ Before using the cooker make sure that there is sufficient ventilation. Open windows or the skylight.
- ▶ Do not use the gas cooker or gas oven for heating purposes.
- ▶ If there are several gas devices, each gas device must have its own gas isolator tap. If individual gas devices are not in use, close the respective gas isolator tap.
- ▶ Ignition safety valves must close within 1 minute after the gas flame has extinguished. A clicking sound is audible. Check function from time to time.
- ▶ The built-in gas devices are exclusively meant for use with propane or butane gas or a mixture of both. The gas pressure regulator as well as all built-in gas devices are designed for a gas pressure of 30 mbar.

- ▶ Propane gas is capable of gasification up to -42 °C, whereas butane gas gasifies at 0 °C. Below these temperatures no gas pressure is available. Butane gas is unsuitable for use in winter.
- ▶ Regularly inspect the gas tube fitted to the gas bottle connection for tightness. The gas tube must not have any tears and must not be porous. Have the gas tube replaced by an authorised specialist workshop no later than ten years after the manufacturing date. The operator of the gas system must see to it that the parts are replaced.
- ▶ Due to its function and construction, the gas bottle compartment is a space which is open to the exterior. Never cover or block up the standard forced ventilations. Otherwise gas that is emitted can not be diverted to the outside.
- ▶ Do not use the gas bottle compartment as storage space as it is not moisture-proof.
- ▶ Secure the gas bottle compartment against unauthorised access. To do this, lock the compartment.
- ▶ The regulator tap on the gas bottle must be accessible.
- ▶ Only connect gas-operated devices (e.g. gas grill) which have been designed for a gas pressure of 30 mbar.
- ▶ The exhaust gas pipe must be fitted tightly to the heating system and to the vent and must be sealed. The exhaust gas pipe must not show any evidence of damage.
- ▶ Exhaust fumes must be able to escape into the atmosphere unhindered and fresh air must be able to enter unhindered. For this reason, keep the exhaust pipe and intake openings clean and unobstructed (e.g. free from snow and ice). For this reason, no snow walls or aprons may lie against the vehicle.

7.2 Gas bottles

- ▶ Gas bottles are only to be transported within the designated gas bottle compartment.
- ▶ Place the gas bottles in vertical position in the gas bottle compartment.
- ▶ Fasten the gas bottles so that they are unable to turn or tilt.
- ▶ If the gas bottles are not connected to the gas tube, always place the protective cap on top.
- ▶ Close the regulator tap on the gas bottle before the gas pressure regulator or gas tube are removed from the gas bottle.
- ▶ Use your hands only to connect the gas pressure regulator or the gas tube to the gas bottles. Do not use any tools.
- ▶ Only use special gas pressure regulators with a safety valve designed for vehicle use. Other gas pressure regulators are not permitted and cannot meet the demanding requirements.
- ▶ Use the gas pressure regulator defroster if the temperature falls below 5 °C.
- ▶ Use only 11 kg or 5 kg gas bottles. Camping gas bottles with built-in check valve (blue bottle with max. 2.5 or 3 kg content) are can be used in exceptional cases with a safety valve.

- ▶ Use the shortest possible tube lengths (150 cm max.) for external gas bottles.
- ▶ Never block the floor ventilation openings below the gas bottles.

- ▷ For gas-operated units the gas pressure must be reduced to 30 mbar.
- ▷ Connect gas pressure regulator complete with safety valve directly to bottle valve.

  The gas pressure regulator reduces the gas pressure in the gas bottle down to the operating pressure of the gas devices.
- ▷ For filling and connecting the gas bottles in Europe the accessories shops have corresponding Euro filling sets and Euro bottle sets.
- ▷ Information available at the dealers or service centre.
- ▷ For information on the gas supply in Europe see chapter 17.

7.3 Changing gas bottles

- ▶ When changing gas bottles, do not smoke or create any open fire.
- ▶ When you have changed the gas bottle, check whether gas escapes at the connection points and unions. Use a leakage search spray to spray the relevant connection point or union. These agents are available at the accessories shop.

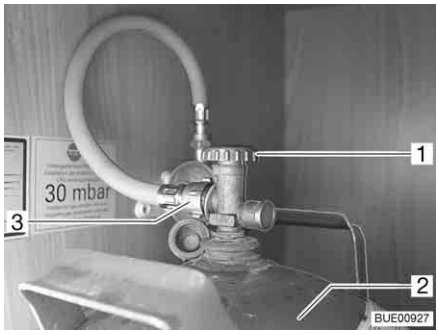

Fig. 95 Gas bottle compartment

- Open external gas bottle compartment (see chapter 6).
- Close the regulator tap (Fig. 95,1) on the gas bottle (Fig. 95,2). Pay attention to the direction of the arrow.
- Unscrew the gas tube (Fig. 95,3) by hand from the gas bottle.
- Release the fixing belts and remove the gas bottle.
- Place a filled gas bottle in the gas bottle compartment.
- Fix gas bottle in place with the fixing belts.
- Screw gas tube on gas bottle by hand.

7.4 Gas isolator taps

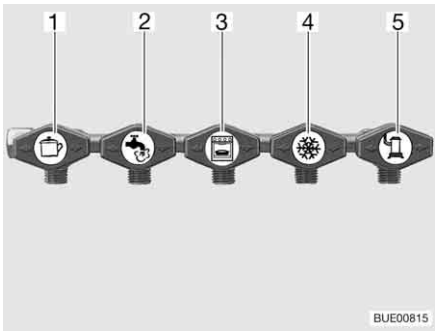

1 Cooker
2 Boiler (special equipment)
3 Oven (special equipment)
4 Refrigerator
5 Heater

Fig. 96 Symbols for the gas isolator taps

A gas isolator tap (Fig. 96) for every gas device is built into the vehicle. The gas isolator taps are located behind a flap in the kitchen area.

7.5 External gas connection (special equipment)

- ▶ If the external gas connection is not in use, always close the gas isolator tap.
- ▶ Only gas appliances with a suitable adapter should be connected to the external gas connection.
- ▶ Connect only external gas appliances which are designed for an operation pressure of 30 mbar.
- ▶ Once you have made the connection and opened the gas isolator tap, make sure that no gas is escaping at the connection point. If there is a leak in the external gas connection, gas will escape into the open air. Immediately close the gas isolator tap and the regulator tap on the gas bottle. Have the external gas connection checked by an authorised specialist workshop.
- ▶ When connecting an external gas appliance, make sure that there is nothing near the external gas connection that could cause a spark.
- ▶ Do not use the external gas connection to fill gas bottles. Observe the information stickers on the external gas connection.

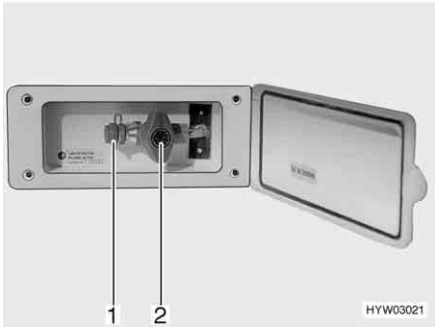

Fig. 97 External gas connection, gas isolator tap closed

The external gas connection (Fig. 97) is located at the rear or to the left or right of the vehicle depending on the model.

- Connect the external gas device to the connection point (Fig. 97,1).
- Open the gas isolator tap (Fig. 97,2).

7.6 DuoControl switching facility (special equipment)

▶ Do not use the switching facility in closed spaces.

▷ Also read the manufacturer's instruction manual.

The DuoControl is an automatic switching facility with a remote display for a two-bottle gas system. The DuoControl switching facility automatically switches gas supply from the primary bottle to the reserve bottle as soon as the primary bottle is either empty or no longer ready for operation. The gas appliances may still continue operation. The DuoControl switching facility is suitable for all commercial gas bottles from 3 kg to 33 kg.

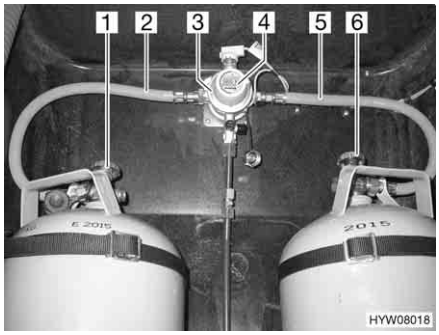

Fig. 98 DuoControl switching facility

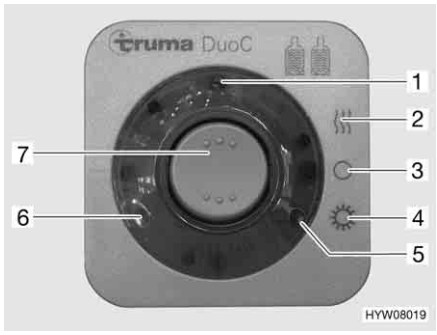

Fig. 99 Operating unit

Construction of the unit

The DuoControl switching facility consists of a reversing valve (Fig. 98,3) and an operating unit (Fig. 99). The reversing valve is installed between the gas tubes (Fig. 98,2 and 5). The knob (Fig. 98,4) on the reversing valve is used to select which of the gas bottles is to be used as a primary bottle and which is to be used as a reserve bottle.

The reversing valve is equipped with the regulator defroster Eis-Ex. This prevents damage to the gas system during the winter months.

Only the electrical functions can be switched at the operating unit (Fig. 99). The regulator taps on the gas bottles (Fig. 98,1 and 6) must be opened manually.

The reversing valve provides a constant gas pressure, regardless of which gas bottle is being drawn upon. The two indicator lamps on the operating unit indicate the level of the primary bottle. When the green indicator lamp (Fig. 99,6) illuminates, the primary bottle is full. When the red indicator lamp (Fig. 99,5) illuminates, the primary bottle is empty. In this case, the reserve bottle is used for the gas supply.

Operating modes

The DuoControl switching facility has two operating modes:

- Winter operation "On and heating"
- Summer operation "On"

Putting into operation:

- Open the regulator taps on the gas bottles (Fig. 98,1 and 6).
- Use the knob (Fig. 98,4) on the reversing valve (Fig. 98,3) to select the gas bottle which is to be the primary source of gas (primary bottle). Always turn the knob as far as it will go.
- Switch on the DuoControl switching facility at the operating unit (Fig. 99). To do so, set the rocker switch (Fig. 99,7) to winter operation "On and heating" (Fig. 99,2) or to summer operation "On" (Fig. 99,4). The reversing valve is now deaerated. The yellow indicator lamp (Fig. 99,1) illuminates if the winter operation has been selected and the regulator defroster is activated.

Switching off:

- Set the rocker switch (Fig. 99,7) to "O" (Fig. 99,3). The yellow indicator lamp (Fig. 99,1) goes out.
- Close the regulator taps on the gas bottles (Fig. 98,1 and 6).

Remote display

The indicator lamps on the operating unit (Fig. 99,5 and 6) indicate in the vehicle interior whether the primary bottle is ready for operation.

Changing gas bottles

If the green indicator lamp (Fig. 99,6) stops illuminating during operation and the red indicator lamp (Fig. 99,5) illuminates, the gas bottle selected as primary bottle is empty and needs to be changed. The reserve bottle continues supplying the gas appliances with gas.



► When changing gas bottles, do not smoke or create any open fire.

Changing gas bottles:

- Close the regulator tap on the empty gas bottle.
- Unscrew the gas tube of the gas bottle.
- Connect the full gas bottle to the gas tube.
- Open the regulator tap on the gas bottle.
- Set the knob on the reversing valve with a half-turn, so that the newly replaced gas bottle will serve as a reserve bottle.

7.7 Gas alarm system (special equipment)



▷ If the gas sensor or a cable is defective, the buzzer sounds until the defect has been rectified.

▷ If a deodorant spray, hairspray or a powerful cleaning agent is used in the immediate vicinity of the gas sensor, a false alarm may be triggered. Extended time in a tunnel (traffic jam) may also trigger a false alarm.

▷ Also read the manufacturer's instruction manual.

The gas alarm system has two functions:

- Alarm in the case of an attack with narcotic gas
- Alarm if there is a leak in the gas system

The gas alarm system is ready for operation as soon as the 12 V power supply is supplied with power.

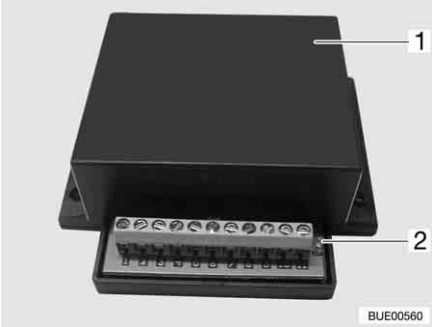

Fig. 100 Gas sensor

The flashing LED (Fig. 100,2) next to the terminal block of the gas sensor (Fig. 100,1) indicates readiness for operation.

Switching off the buzzer:

- Briefly switch off the 12 V power supply and switch it on again (e.g. on the safety cut-out in the power pack).

Chapter overview

This chapter contains instructions regarding the electrical system of the caravan.

The instructions address the following topics:

- safety
- explanations of terms relating to the battery
- 12 V power supply
- power supply unit
- 230 V power supply
- connection to the 230 V power supply
- fuse rating
- towing vehicle connection
- external socket
- electrical wiring

The operation of the electrical appliances of the housing body is described in chapter 9.

8.1 General safety instructions



▶ Only allow qualified personnel to work on the electrical system.

The vehicle is a safe place during a storm (Faraday cage). However, to protect the electrical devices, disconnect the 230 V connection and retract the antennae as a precaution.

8.2 Terms

Capacity

Capacity refers to the amount of electricity which can be stored in a battery.

The capacity of a battery is given in ampere hours (Ah). If a battery possesses a capacity of 80 Ah, then the battery can dispense a current of 1 A for 80 hours or a current of 2 A for 40 hours.

External influences such as temperature may alter the storage capacity of the battery.

8.3 12 V power supply



▷ If you use the battery of the towing vehicle to provide power for the caravan, bear in mind that the battery capacity is restricted. If you place too great a burden on the battery, this may lead to starting difficulties.

▷ Always disconnect the electrical connection between the towing vehicle and the caravan before the caravan is connected to the local power supply. In order to carry this out, disconnect the plug from towing vehicle socket.

When the caravan is not connected to the 230 V power supply, 12 V power supply is performed by the starter battery of the connected towing vehicle. The starter battery has a limited power supply only. For this reason, the electrical appliances should not be operated for a long time without using the 230 V power supply when the engine of the towing vehicle is switched off.

8.3.1 Power supply unit CSV 300

▷ Do not cover the ventilation slots on the power supply unit. Danger of overheating.

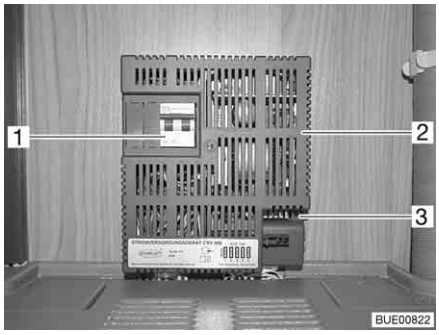

1 Two-pole automatic circuit breaker
2 Power supply unit
3 Flat fuses

Fig. 101 Power supply unit CSV 300

Functions

The power supply unit distributes the current to the 12 V circuits and secures them.

If the vehicle is **not** connected to the 230 V supply, the requisite power supply is provided by the battery of the towing vehicle, as long as contact 9 "constant positive" is connected to the towing vehicle socket (see connection diagram at the end of this chapter). The 12 V living area lamps and the 12 V plug sockets can be used, with the exception of the TV output plug socket.

Devices with a maximum of 10 A can be connected to the sockets.

If the vehicle is connected to the 230 V power supply, the power supply unit switches the power supply in the living area automatically from the towing vehicle battery to mains operation. The internal power pack in the power supply unit provides 12 V plug sockets and 12 V appliances with power.

▷ The power supply unit is not used to charge the starter battery of the towing vehicle.

Position

The power supply unit (Fig. 101) is installed in the wardrobe.

Thermal cut-out

If the power supply unit becomes too hot during operation due to high ambient temperatures or insufficient ventilation, the power pack reduces the power output. As a result, the activated appliances which are connected to the power supply unit are supplied with a lower voltage than 12 V. If the power supply unit is still too warm, switch it off completely. If this over-temperature protection (thermal cut-out) is activated, improve the ventilation of the power supply unit and reduce the number of 12 V appliances that are switched on.

▷ Further information can be obtained from the separate instruction manual "Power supply unit".

8.4 230 V power supply

► Only allow qualified personnel to work on the electrical system.

The 230 V power supply provides electricity for:

- sockets with earth contact for appliances with maximum 16 A
- refrigerator
- power supply unit

The electrical appliances connected to the 12 V power supply of the living area are supplied with voltage by the power supply unit.

8.4.1 230 V connection



▶ The external 230 V power supply must be protected by fuse with a fault current protection switch (FI-switches, 30 mA).



▷ Always disconnect the electrical connection between the towing vehicle and the caravan before the caravan is connected to the local power supply. In order to carry this out, disconnect the plug from towing vehicle socket.



▷ For the connection points on camp sites (camping distributors) highly sensitive fault current protection switches (FI-switches, 30 mA) are obligatory.

▷ Depending on the equipment, the vehicle is already equipped with a fault current protection switch (FI-switch).

The vehicle can be connected to an external 230 V power supply. The cable may have a length of maximum 25 m.

8.4.2 Power cable for external 230 V connection



▶ Completely unwind the cable on cable drums to prevent overheating.

Power cable

- Three-core (3 x 2.5 mm^2) flexible rubber sheathed cable
- Maximum 25 m in length
- 1 plug with earth contact
- 1 socket with earth contact (plug-in devices according to EN 60309)

Connection possibilities

For your power cable, we recommend using a CEE connection cable with a CEE plug and coupling. If this type of connection is not feasible, we recommend the following combination with a safety plug:

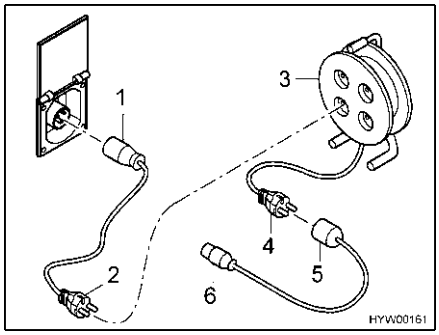

Fig. 102 Connection possibilities 230 V connection

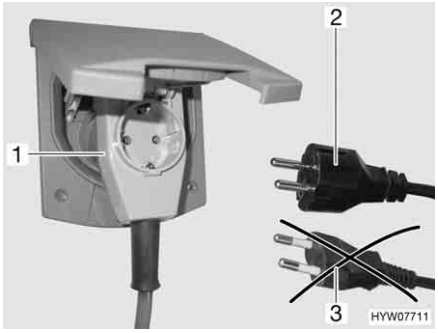

Fig. 103 Connecting an angled connector with socket

- Adapter cable:
  CEE 17 socket with earth contact (Fig. 102,1) – plug with earth contact (Fig. 102,2)
- Cable reel:
  Socket with earth contact (Fig. 102,3) – plug with earth contact (Fig. 102,4)
- Adapter cable:
  CEE 17 socket with earth contact (Fig. 102,5) – plug with earth contact (Fig. 102,6)

▶ When using a CEE 17 angled connector with rear socket (Fig. 103,1) only use a rubberised and sealed IP 44 socket with earth contact (Fig. 103,2). Do not use sockets without earth contact (Fig. 103,3). Danger of electrocution!

Depending on the design, the flap for the 230 V connection is designated with the symbol "⚡".

Connecting the power cable:

- Open external flap.
- Depending on the design, tilt the cover upwards.
- Insert connector.

▷ Depending on the design, disconnect the connector before removing it.

8.5 Fuses

▶ Only replace defective fuses when the cause of the defect is known and has been remedied.

▶ Replace defective fuses only after the power supply has been turned off.

▶ Never bridge or repair fuses.

8.5.1 12 V fuses

The appliances connected to the 12 V power supply in the living area are fused individually. The fuses are accessible at the power supply unit or in a fuse holder close to the power supply unit.

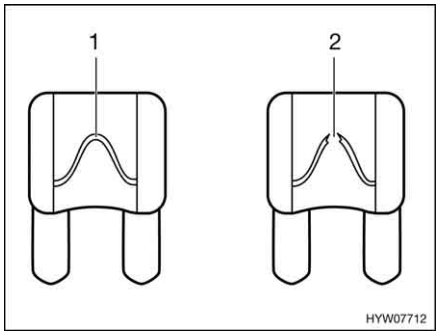

1 Unbroken fuse element
2 Broken fuse element

Fig. 104 12 V fuse

An intact 12 V fuse can be detected by the unbroken fuse element (Fig. 104,1). If the fuse element is broken (Fig. 104,2), change the fuse.

Before changing fuses, take the function, value and colour of the relevant fuses from the following specifications. When changing fuses, only use flat fuses with the values shown below.

Fuses on the power supply unit CSV 300

Function	Type of fuse	Value/colour
Fuse circuit 1	Flat fuse	15 A blue
Fuse circuit 2	Flat fuse	15 A blue
Fuse circuit 3	Flat fuse	15 A blue
Fuse circuit 4	Flat fuse	15 A blue
Fuse circuit 5	Flat fuse	15 A blue

Fuse for the refrigerator

The fuse is located in a fuse holder in the vicinity of the power supply unit unit.

- Type of fuse: Flat fuse 15 A/blue

Changing:

- Remove cover on the floor of the wardrobe.
- Replace fuse.
- Reattach cover once fuse has been replaced.

Fuse for the Thetford toilet (swivel toilet)

The fuse is located in the locker wall of the Thetford cassette.

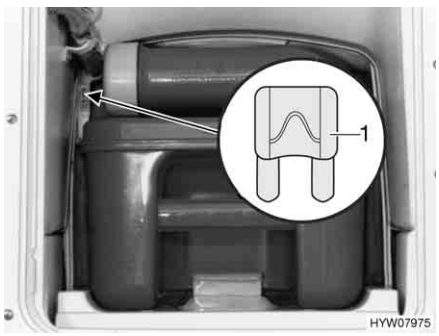

1 Flat fuse 3 A/purple

Fig. 105 Fuse for the Thetford toilet

Changing:

- Open the flap for the Thetford cassette on the outside of the vehicle.
- Pull out the Thetford cassette completely.
- Replace fuse (Fig. 105,1).

Fuse for the Thetford toilet (fixed seat)

The fuse is located in the locker wall of the Thetford cassette.

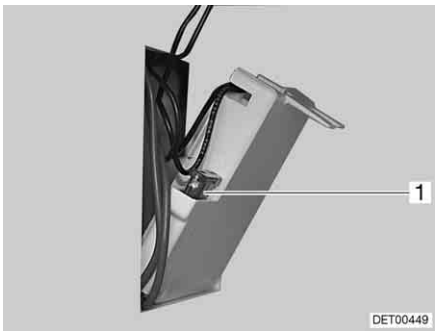

1 Flat fuse 3 A/purple

Fig. 106 Fuse for the Thetford toilet

Changing:

- Open the flap for the Thetford cassette on the outside of the vehicle.
- Remove the Thetford cassette and swing out the flap in the housing panel.
- Replace fuse (Fig. 106,1).

8.6 230 V fuse

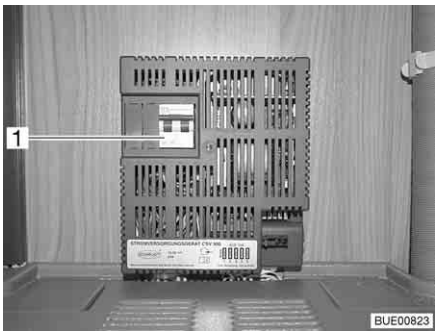

1 Two-pole automatic circuit breaker

Fig. 107 230 V automatic circuit breaker (CSV 300)

A two-pole safety cut-out (Fig. 107,1) in the power supply unit secures the 230 V power supply.

Position The power supply unit is installed in the wardrobe.

8.7 Thirteen-pin plug connection diagram

▷ Note the colours of the connecting cable of the socket which is fitted to the towing vehicle. This makes any new connection which may be necessary easier.

▷ To connect the thirteen-pin plug to a seven-pin socket, use a commercially available adaptor.

The following plugs are illustrated in the following:

- Plug variant 1 (left illustration)
- Plug variant 2 (right illustration)

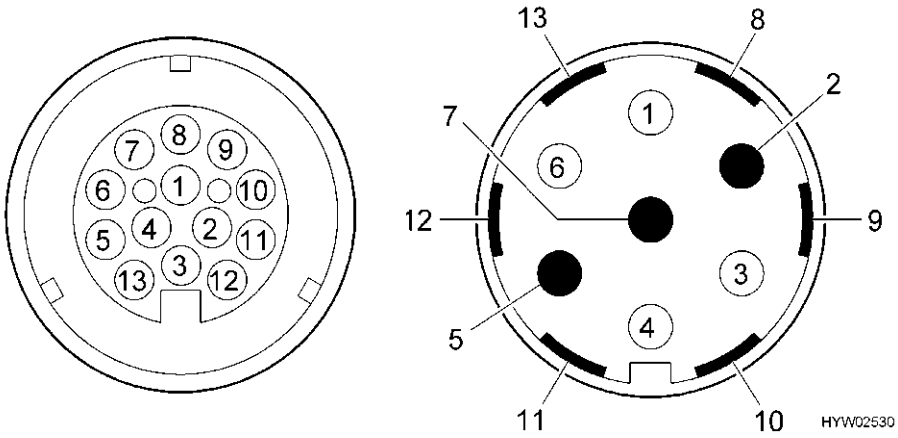

Fig. 108 Contact diagram of the thirteen-pin plug

Connection diagram

Contact number	DIN-specification	Function	Cable colour	Cross section of the wire
1	L	Left direction indicator	Yellow	1.5 mm^2
2	54 G	Fog tail light	Grey	1.5 mm^2
3 [1)]	31	Earth (contacts 1, 2, 4 - 8)	White	2.5 mm^2
4	R	Right direction indicator	Green	1.5 mm^2
5	58 R	Right tail light, side marker light (white/red), clearance light, marker light (amber), licence plate light	Brown	1.5 mm^2
6	54	Brake lights	Red	1.5 mm^2
7	58 L	Left tail light, side marker light (white/red), clearance light, marker light (amber), licence plate light	Black	1.5 mm^2
8		Back-up light	Purple	1.5 mm^2
9		Constant positive	Orange	2.5 mm^2
10		Positive charging line	Brown blue	2.5 mm^2
11		Earth charging line	Orange-white	2.5 mm^2
12		Not assigned	–	–
13 [1)]		Earth (contacts 9 - 12)	Blue-white	2.5 mm^2
14		Switch-off contact for the fog tail light	–	–

[1)] These earth cables may not be connected to electrical conductors on the trailer side.

8.8 External socket (special equipment)



1 SAT socket
2 230 V socket
3 TV socket
4 12 V socket

Fig. 109 External socket

The 230 V socket and the 12 V socket can be used to power electrical devices in the awning.

Connection possibilities

TV socket and SAT socket offer various possibilities for TV operation:

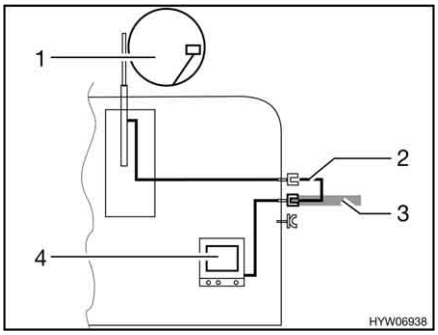

Fig. 110 TV inside the vehicle

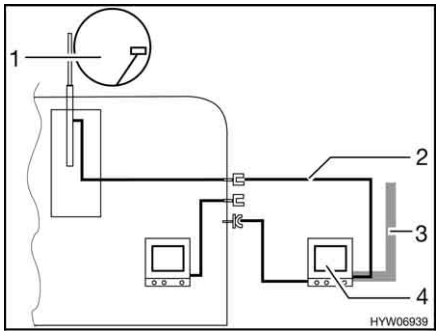

Fig. 111 TV in the awning

- TV inside the vehicle (Fig. 110,4): Connection to roof antenna (Fig. 110,1) with connection cable (Fig. 110,2)
- TV inside the vehicle (Fig. 110,4): Connection to external antenna (Fig. 110,3)
- TV inside the awning (Fig. 111,4): Connection to roof antenna (Fig. 111,1) with connection cable (Fig. 111,2)
- TV inside the awning (Fig. 111,4): Connection to external antenna (Fig. 111,3)

8.9 Circuit diagrams

8.9.1 Circuit diagram, interior

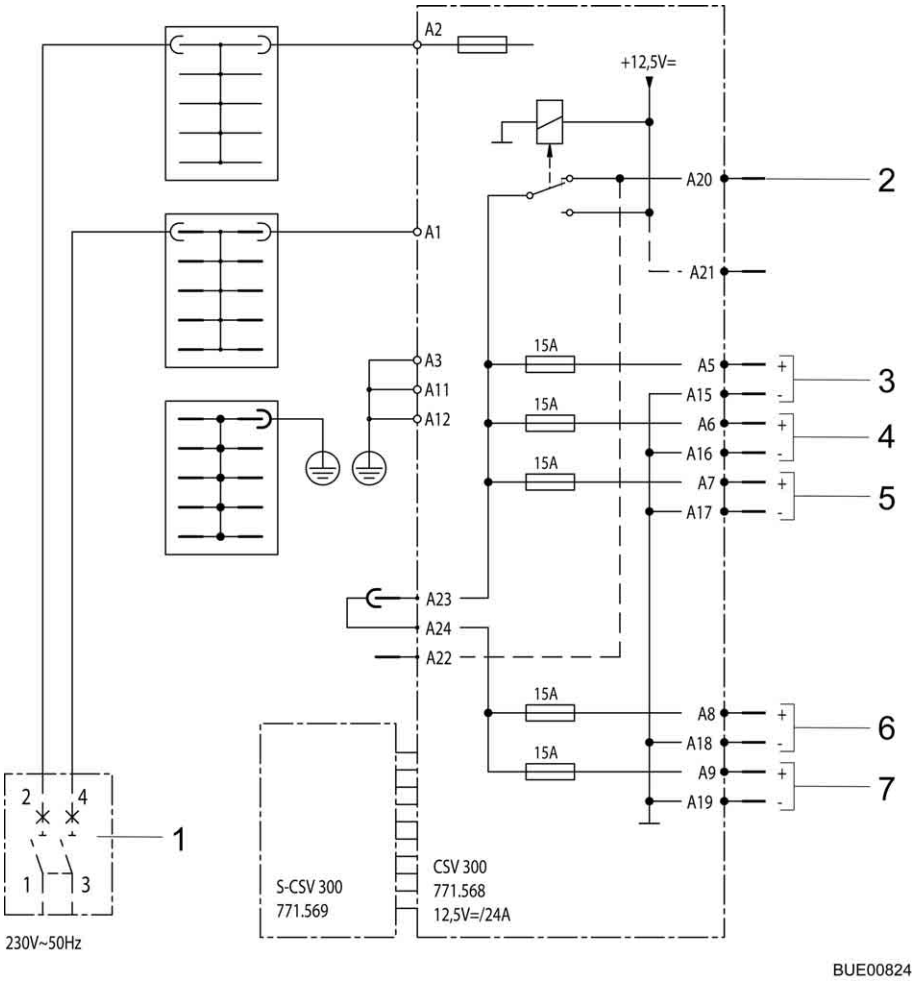

Fig. 112 Circuit diagram, interior (CSV 300)

1 230 V automatic circuit breaker
2 Battery towing vehicle (external fuse max. 15 A)
3 12 V output, circuit 1
4 12 V output, circuit 2
5 12 V output, circuit 3
6 12 V output, circuit 4
7 12 V output, circuit 5

8.9.2 Circuit diagram, exterior

▷ Cable installation can differ depending on the model.

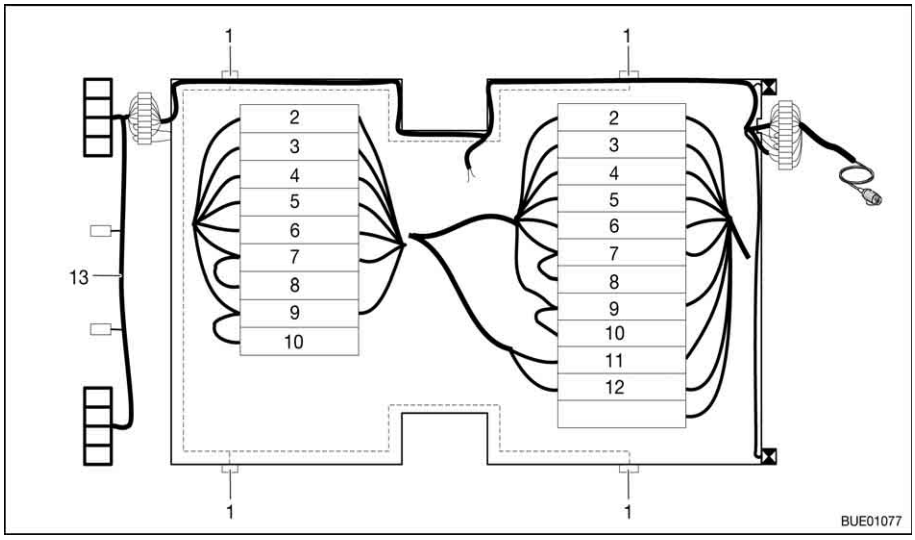

Fig. 113 Circuit diagram, exterior

1 Side marking light (number depends on type)
2 Left direction indicator (yellow)
3 Fog tail light (grey)
4 Earth 1 - 8 (white)
5 Right direction indicator (green)
6 Brake lights (red)
7 Right tail light (brown)
8 Right side marking lamps (brown)
9 Left tail light (black)
10 Left side marking lamps (black)
11 Constant positive (blue)
12 Earth 9 - 12 (blue-white)
13 Wiring harness, bumper (dependent on type)

Chapter overview

This chapter contains instructions regarding the appliances of the vehicle.

The instructions refer exclusively to the operation of the appliances.

Further information about the appliances can be found in the instruction manuals for the appliances, included separately with the vehicle.

The instructions address the following topics:

- heater
- air conditioning unit
- boiler
- gas cooker
- gas oven
- microwave oven
- extractor hood
- refrigerator

9.1 General

▷ The heat exchanger of the Truma hot-air heater has to be replaced after 30 years. Only the manufacturer of the heater or an authorised specialist workshop is allowed to replace the heat exchanger. The operator of the heater must see to it that the parts are replaced.

▷ For safety reasons, spare parts for pieces of heating appliances must correspond with manufacturer's instructions and be permitted by the manufacturer as a spare part. These spare parts may only be fitted by the manufacturer or an authorised specialist workshop.

▷ Further information can be obtained in the instruction manual for the respective appliance.

The heater, boiler, cooker and refrigerator are fitted depending on the model of the vehicle.

In this instruction manual a description is given only for the operation of the appliances and their particular features.

To operate gas appliances, first open the regulator tap on the gas bottle and the gas isolator tap corresponding to the appliance.

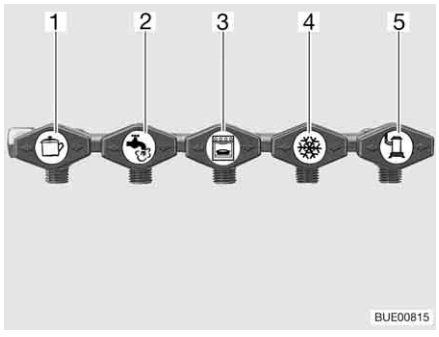

1 Cooker
2 Boiler (special equipment)
3 Oven (special equipment)
4 Refrigerator
5 Heater

Fig. 114 Symbols for the gas isolator taps

9.2 Heater

- ▶ In winter, check that the waste gas vent on the vehicle roof is free of snow and ice before using the heater.
- ▶ Never let gas escape unburned due to danger of explosion.
- ▶ Never run the heater in gas operation when refuelling, on ferries or in the garage. Danger of explosion!
- ▶ Never operate the heater in gas operation in closed spaces (e.g. garages). Danger of poisoning and suffocation!
- ▶ If the circulation fan does not activate automatically, switch the circulation fan on from heating level 3 to 4. There is danger of overheating for the heater!
- ▶ Do not damage the exhaust gas pipe.
- ▶ The waste gas vent may neither be closed nor blocked.
- ▶ When camping in winter, the Truma waste gas vent extension should be used to prevent snow from choking the waste gas vent.
- ▶ Do not use the space behind the heater as a storage compartment.

When lighting the heater for the first time a small amount of smoke and odour will occur. Immediately set the operating switch of the heater to its highest position. Open doors and windows and ventilate well. Smoke and odour will disappear by themselves after a while.

9.2.1 To heat properly

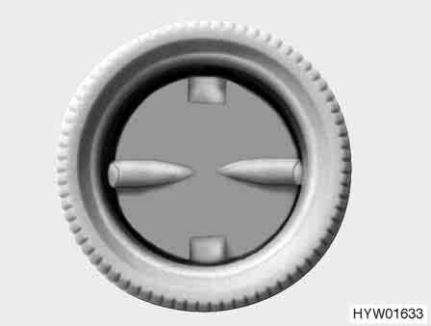

Fig. 115 Air outlet nozzle

Hot air distribution

Several air outlet nozzles (Fig. 115) are built into the vehicle. Pipes conduct the warm air to the air outlet nozzles. Turn the air outlet nozzles in a suitable position so the air can escape as required.

Adjusting the air outlet nozzles

- Fully open: Full hot air stream
- Half or partially open: Reduced hot air stream

When five air outlet nozzles are completely opened, less warm air escapes through each nozzle. However, if only three air outlet nozzles are opened, more warm air flows out of each nozzle.

9.2.2 Hot-air heater

▶ In case of problems wait for two minutes before trying again.

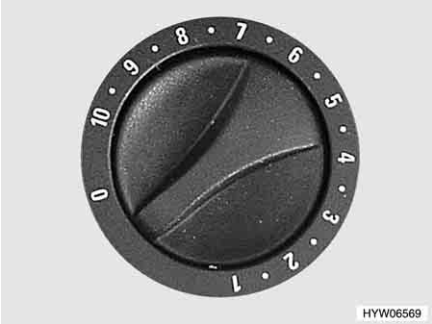

Fig. 116 Heater control knob

Switching on:

- Open the regulator tap on the gas bottle and the gas isolator tap "Heater".
- Turn control knob on the heater to the required position and press it firmly. The automatic ignition produces ignition sparks. A clicking noise can be heard.
- Keep the control knob pressed until the flame burns. The burning of the flame can be checked in the inspection window in the heater cover.
- Hold the control knob down for a further 10 seconds, until the ignition fuse starts up.

▷ The automatic ignition sparks until the gas ignites. If there is no gas, it will continue to spark until the battery in the automatic ignition is empty. When the heater is not required, set the control knob to "0" to avoid the battery in the automatic ignition running flat.

▷ If the clicking noise cannot be heard at all or only in intervals of several seconds during ignition: Change the battery in the automatic ignition.

▷ Insert a new batteries before the start of every heating season.

▷ See section 9.2.3 on how to change the battery in the automatic ignition.

Switching off:

- Turn the control knob on the heater to "0". The automatic ignition is switched off simultaneously.
- Close the gas isolator tap "Heater" and the regulator tap on the gas bottle.

▷ Further information can be obtained in the manufacturer's instruction manual.

9.2.3 Automatic ignition

The automatic ignition ignites until the gas is burning or the battery in the automatic ignition is empty.

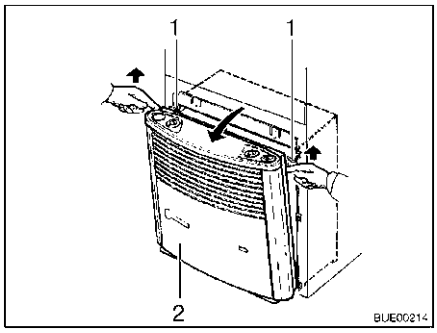

Fig. 117 Removing heater cover

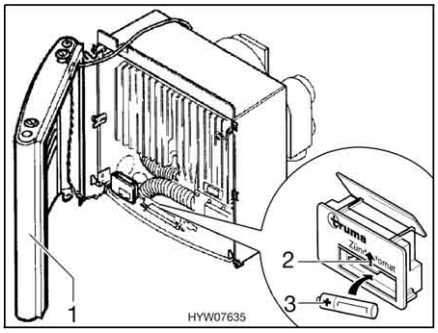

Fig. 118 Heater opened

Changing the battery:

- Make certain that the heater is switched off.
- Remove heater cover (Fig. 117,2). Pull the heater cover upwards and forwards, press up the retaining springs (Fig. 117,1) to the side and tip the cover forwards.
- Turn the cover (Fig. 118,1) to the side, so that the connecting cables for the hot-air fan as well as the ignition control lamp do not need to be disconnected.
- Push battery chamber cover on the automatic ignition (Fig. 118,2) upward.
- Remove the old battery out of the battery chamber of the automatic ignition.
- Insert a new battery (Fig. 118,3) of the same type, correctly aligned (+/-), into the battery chamber of the automatic ignition. Only use temperature resistant (+70 °C) and leak-proof Mignon batteries.
- Push battery chamber cover on the automatic ignition upward.
- Press the stop lever to the right, until the lock engages audibly.

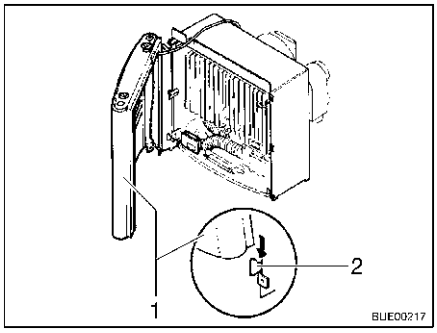

Fig. 119 Heater cover, retaining clips

- Mount the heater cover. To do this, place the cover (Fig. 119,1) on the lower retaining clips (Fig. 119,2).
- Insert the operating rod from underneath into the grip socket and allow the cover to catch in place above.

9.2.4 Circulation fan (partially special equipment)

The circulation fan together with the hot-air heater ensures a better distribution of hot air throughout the caravan.

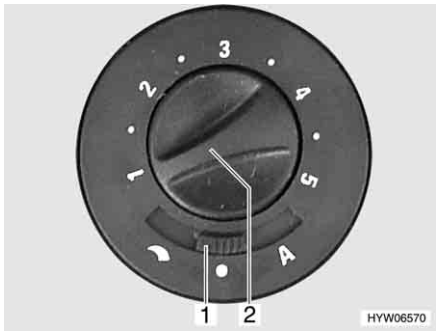

Fig. 120 Operating switch for circulation fan

Switching circulation fan on:

- Set sliding switch (Fig. 120,1) to "⁀" (manual control) or "**A**" (automatic operation).
- Turn the knob (Fig. 120,2) to set (manual control) or limit (automatic operation) the power of the circulation fan.

Switching circulation fan off:

- Set sliding switch (Fig. 120,1) to "●" (off).

▷ Further information can be obtained in the manufacturer's instruction manual.

9.2.5 Airmix comfort package (special equipment)

The air circulation fan can be installed on the floor or on the wall with the Airmix comfort package. This guarantees a particularly quiet running, since no noise transferring connection is made to the fitted cover of the heater.

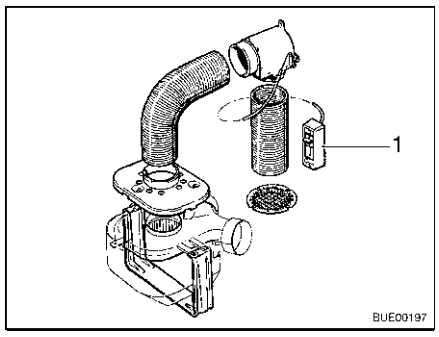

Fig. 121 Airmix comfort package

Fresh outside air is guided into the caravan by the Airmix. Advantages of outside air are:

- Cooling effect in the summer
- Drying effect in the winter

The outside air can be mixed progressively with the inside air that has already been heated by adjusting the operating controls (Fig. 121,1).

▷ See installation instructions of the separate instruction manual for the Airmix comfort package.

9.2.6 Ultraheat additional electric heater (special equipment)

The Ultraheat additional electric heater is built-in to the hot-air heater. Therefore there are three heating options:

- Only the hot-air heater
- Hot-air heater and electric heater
- Only the electric heater

The vehicle can be heated more quickly with the additional electric heater.

▷ The additional electric heater only operates if the vehicle is connected to the 230 V power supply.

▷ If the heater is operated by electricity and gas simultaneously, the additional electric heater switches off to prevent possible overheating by the stronger gas burner.



1 Rotary switch
2 Off
3 Temperature control knob

Fig. 122 Operating unit for Ultraheat additional electric heater

Switching on:

- Connect the vehicle to the 230 V power supply (see section 8.4).
- Turn the rotary switch (Fig. 122,1) to the desired output level (500, 1000 or 2000 W).
- Turn temperature control knob (Fig. 122,3) to the desired output level.

Switching off:

- Turn the rotary switch (Fig. 122,1) to "O" (Fig. 122,2).

9.2.7 Warming unit for waste water pipes (special equipment)

▷ Always only press the test button briefly.

▷ The warming unit only functions when the vehicle is connected to a 230 V power supply.

In order to prevent waste water pipes freezing up, the waste water pipes can be electrically warmed.

When the warming unit is turned on, the temperature of the waste water pipes is monitored by temperature sensors. If the temperature falls below 5 °C, the heating elements are switched on and the waste water pipes are warmed. If the temperature rises above a certain level, the heating elements are switched off again.

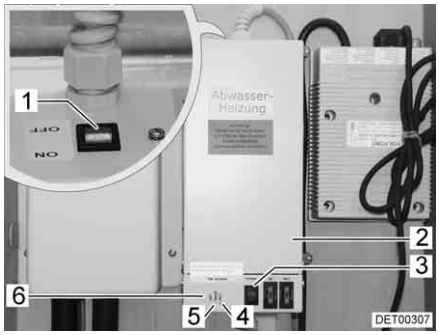

Fig. 123 Transformer with control unit

The 230 V AC/12 V DC transformer (Fig. 123,2) is installed in the wardrobe or in the storage area beneath the seating group, depending on the model.

The control unit is integrated in the transformer housing. The control lamps have the following meanings:

- The indicator lamp (Fig. 123,5) lights up in green: Regulation in operation
- The indicator lamps (Fig. 123,4 and 6) light up in red: Waste water pipes are warmed

A test button (Fig. 123,3) is integrated in the housing with which the control unit can be operated for a short time. By pressing the test button, the function of the warming unit can be tested, even if the ambient temperature is above 5 °C.

Switching on:
- Connect the vehicle to a 230 V power supply (see section 8.4.1).
- Turn switch (Fig. 123,1) on the transformer (Fig. 123,2) to "ON".

Switching off:
- Turn switch (Fig. 123,1) on the transformer (Fig. 123,2) to "OFF".

9.2.8 Electrical floor warming unit (special equipment)



▶ On models with electrical floor warming unit, never drill holes in the floor or screw in any screws. Careful with sharp objects. There is danger of a power cut or a short circuit due to damage to a heater wire.



▷ Do not cover the transformer. Danger of overheating!



▷ The electrical floor warming unit only operates if the vehicle is connected to the 230 V power supply.

▷ The output of the electrical floor warming unit alone is not sufficient to heat the living area.

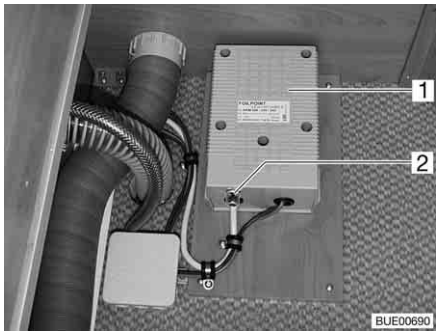

Fig. 124 Transformer for electrical floor warming unit

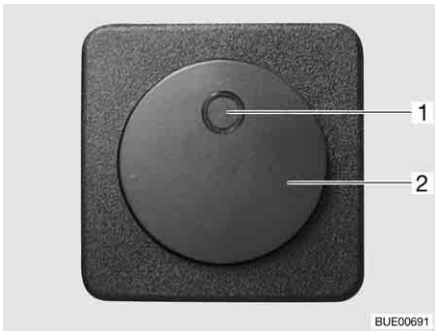

Fig. 125 Switch for electrical floor warming unit

The transformer (Fig. 124,1) for the electrical floor warming unit is installed either in the bench seat or in the bedding box, depending on the model.

Switching on:

- Connect the vehicle to the 230 V power supply (see chapter 8).
- Press the rocker switch (Fig. 125,2). The indicator lamp (Fig. 125,1) on the switch is illuminated.

Switching off:

- Press the rocker switch (Fig. 125,2). The indicator lamp (Fig. 125,1) on the switch goes off.

After switching off, the floor remains warm for a while, due to residual heat.

If the transformer is overloaded, the overload protection is actuated. The pin (Fig. 124,2) jumps out.

Switching on overload protection:

- Press the pin (Fig. 124,2) on the overload protection when the transformer is cooled.

9.3 Air conditioning unit (special equipment)

9.3.1 Dometic



▷ If the unit is operating, always open at least one ventilation flap.



▷ In the winter, vehicle heating can be supported but not replaced by the air conditioning unit.

▷ Also read the manufacturer's instruction manual.

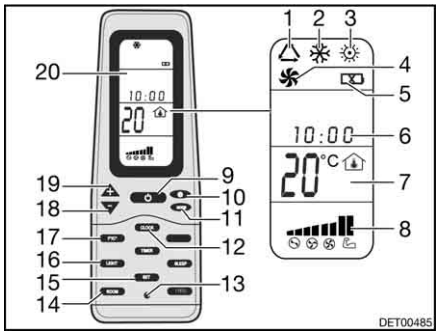

Fig. 126 Remote control

1 Symbol for automatic mode
2 Symbol for cold mode
3 Symbol for warm mode
4 Symbol for ventilation mode
5 Symbol for discharged batteries
6 Time
7 Temperature display
8 Fan speed display
9 ON/OFF button
10 Fan speed button
11 "MODE" button
12 "CLOCK" button
13 Reset key
14 Interior temperature display button "ROOM"
15 Store button "SET"
16 Light button "LIGHT"(optional)
17 Temperature unit change button "F/C°"
18 Temperature decrease button "-"
19 Temperature increase button "+"
20 Display

To execute the individual switching commands, always point the remote control in the direction of the ceiling unit.

Operating modes

The air conditioning unit has the following operating modes:

- Automatic
- Ventilation, manual
- Cooling, manual
- Heating, manual

Switching on:

- Press the ON/OFF button (Fig. 126,9).
- Press the "Mode" button (Fig. 126,11) as often as required until the required mode (Fig. 126,1, 2, 3 or 4) is indicated on the display (Fig. 126,20).
- Use the "+" (Fig. 126,19) and "–" (Fig. 126,18) buttons to set the desired temperature.
- Use the fan speed button (Fig. 126,10) to select the desired fan level.

Switching off:

- Press the ON/OFF button (Fig. 126,9).



Fig. 127 Air conditioning unit (Dometic)

LED

The LED (Fig. 127,4) on the ceiling unit (Fig. 127,1) displays the operating status of the air conditioning unit:

Status LED	Signification
Off	Air conditioning unit off
Orange	Air conditioning unit ready to operate
Green	Air conditioning unit in operation
Red (continuous)	No 230 V power connection
Red (flashes once intermittently)	Fault in the interior temperature gauge
Red (flashes twice intermittently)	Fault in the exterior temperature gauge

Air current The air current can be directed in different directions. The distribution of the air current toward the front or back is continuously adjustable.

Adjusting air current:

- Align the two deflectors (Fig. 127,3 and 5) in the desired position.
- Rotate knob (Fig. 127,2) on sliding regulator in an anticlockwise direction. The sliding regulator for air distribution is released.
- Slide the sliding regulator forwards or backwards to the desired position. The side on which the sliding regulator is located is closed.
- Turn the knob tight in the clockwise direction.

9.3.2 Telair

▷ Always wait at least 2 minutes between switching off and switching on again. Otherwise the compressor will be damaged.

▷ If the unit is operating, always open at least one ventilation flap.

▷ The air conditioning unit only runs if the vehicle is connected to a 230 V power supply.

▷ In the winter, vehicle heating can be supported but not replaced by the air conditioning unit.

▷ Following switch-on the air conditioning unit needs approx. 3 minutes until the compressor starts to run and cold air or hot air is output.

▷ Also read the manufacturer's instruction manual.

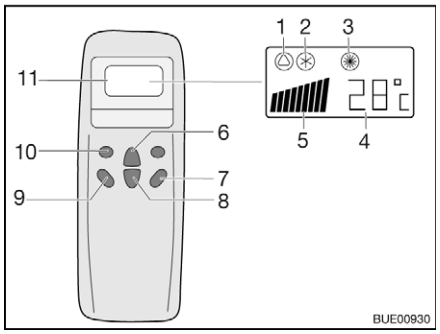

1 Symbol for automatic
2 Symbol for cooling
3 Symbol for heater
4 Temperature (set) display
5 Fan speed display
6 Temperature increase button
7 "ON/OFF" button
8 Temperature reduction button
9 Ventilation speed button
10 "Mode" button
11 Display

Fig. 128 Remote control

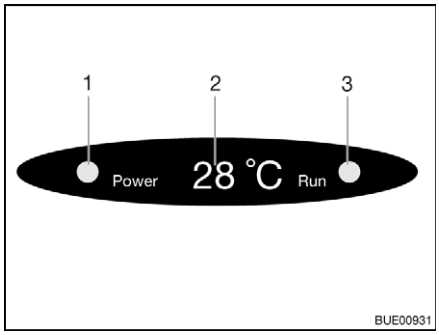

1 Mains connection indicator lamp
2 Temperature (current) display
3 Mode indicator lamp
Green: Cooling
Red: Heater

Fig. 129 Display on the diffusor

To execute the individual switching commands, always point the remote control in the direction of the receiver.

Operating modes

- Automatic
- Cooling
- Heater

Switching on:

- Press the "ON/OFF" button (Fig. 128,7).
- Press the "Mode" button (Fig. 128,10) as often as required until the required mode (Fig. 128,1, 2 or 3) is indicated on the display. The corresponding indicator lamp on the diffusor display (Fig. 129,3) lights up.
- Use the temperature increase button (Fig. 128,6) or temperature reduction button (Fig. 128,8) to set the required temperature.
- Use the ventilation speed button (Fig. 128,9) to select the required ventilation level.

Switching off:

- Press the "ON/OFF" button (Fig. 128,7).

▷ If the air conditioning unit has run in heating mode, the blower will run on for some minutes in order to dissipate the heat completely.

9.4 Boiler

▶ Never let gas escape unburned due to danger of explosion.
▶ Never run the boiler in gas operation when refuelling, on ferries or in the garage. Danger of explosion!
▶ Never operate the boiler in gas operation in closed spaces (e.g. garages). Danger of poisoning and suffocation!
▶ The water in the boiler can be heated up to 65 °C. Risk of scalding!

▷ Switch on the boiler and empty it if the vehicle is not used.
▷ Never use boiler when empty.
▷ If the boiler is not being used, empty it if there is any risk of frost.
▷ Only operate the boiler with the maximum temperature setting if you require a large quantity of warm water. This protects the boiler against the build-up of limescale.

▷ Do not use the water from the boiler as drinking water.

9.4.1 Models with waste gas vent on the right-hand side of the vehicle

▶ If the awning is put up and the boiler is running in gas operation, exhaust gases from the boiler can escape into the awning area. Danger of suffocation! Make sure the area is sufficiently ventilated.

9.4.2 Truma boiler (special equipment)

▶ Remove cap from waste gas vent before using the Truma boiler.

Operating modes

The boiler has three operating modes:

- Gas operation
- 230 V electrical operation
- Combined operation

The operating mode is set with the operating controls.

The regulation of the water temperature in the boiler is only possible with gas operation.

Gas operation

The boiler is operated exclusively with gas.

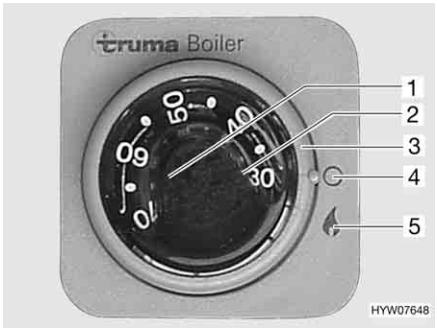

1 Temperature control knob
2 Red indicator lamp "Fault"
3 Rotary switch
4 Off
5 On

Fig. 130 Operating unit for Truma boiler (gas operation)

Switching on:

- Remove cap from waste gas vent.
- Open the regulator tap on the gas bottle and the gas isolator tap "Boiler".
- Set the rotary switch (Fig. 130,3) to "⌂" (Fig. 130,5). The green "Operation" indicator lamp illuminates the knob (Fig. 130,1).
- Adjust the knob (Fig. 130,1) to the required water temperature.

The red indicator lamp (Fig. 130,2) illuminates when there is a fault (see chapter 14).

Switching off:

- Set the rotary switch (Fig. 130,3) on the operating unit (Fig. 130) to "○" (Fig. 130,4).
- Close the gas isolator tap "Boiler" and the regulator tap on the gas bottle.
- Place cap on waste gas vent.

The red indicator lamp (Fig. 130,2) illuminates when there is a fault (see chapter 14).

230 V electrical operation

The boiler is operated exclusively with electricity.

▷ 230 V electrical operation is only possible when the vehicle is connected to the 230 V power supply.



Fig. 131 Flip switch for Truma boiler (230 V electrical operation)

Switching on:

- Connect the vehicle to the external 230 V power supply and switch on the 230 V automatic circuit breaker.
- Set flip switch (Fig. 131,1) to on. The indicator lamp on the switch is illuminated. The water in the boiler is heated up to 65 °C.

Switching off:

- Set the flip switch (Fig. 131,1) to "O". The indicator lamp on the switch goes off.

Combined operation

The water is heated more quickly in the boiler if gas operation and 230 V electrical operation are switched on simultaneously.

▷ Further information can be obtained in the manufacturer's instruction manual.

Filling/emptying the boiler

The boiler can be supplied with water from the water tank.

Depending on the model, the vehicle is fitted with one or several boiler drain cocks. The drain cocks can have different designs (rocking lever or twist cap).

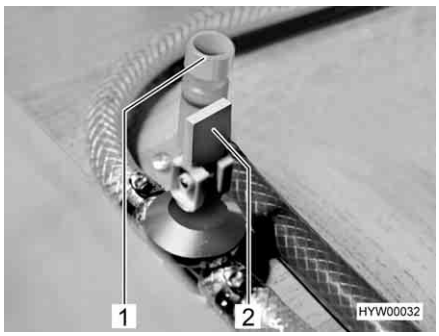

Fig. 132 Drain cocks for Truma boiler

Filling the boiler with water:

- Close all boiler drain cocks. To do this, position the rocking lever (Fig. 132,2) horizontally or turn the cap (Fig. 132,1) in a clockwise direction.
- Set all the water taps to "Hot" and open them. The water pump is turned on. The warm water pipes are filled with water.

- Keep the taps open until the water flowing out of the taps has no bubbles in it. This is the only way to ensure that the boiler is full of water.
- Close all water taps.

Emptying the boiler:

- Set the rotary switch (Fig. 130,3) on the operating unit (Fig. 130) to "O" (Fig. 130,4) or the flip switch (Fig. 131,1) to "O".
- Turn knob (Fig. 130,1) anticlockwise until it can go no further.
- Open all boiler drain cocks. To do this, position the rocking lever (Fig. 132,2) vertically or turn the cap (Fig. 132,1) in an anticlockwise direction.
- Check whether the water has been drained completely from the boiler (approx. 12.5 litres).

9.4.3 Hot water source (special equipment)

▷ Do not fit a check valve in the cold water pipe between the hot water source and the water pump.

▷ Use a pressure reducer when connecting to a central water supply or with strong pumps. The hot water source is designed only for pressures of up to 1.2 bar. In addition, insert a safety/drainage valve in to the cold water pipe.

▷ Do not use the water from the hot water source as drinking water.



Fig. 133 Operating switch for hot water source

The hot water source can either be operated using the 230 V power supply (electrical mode of operation), with the hot air of the heater system or both types of energy. The hot water source heats approx. 5 l water to a temperature of approx. 65 °C.

The electrical mode of operation is activated using the operating switch (Fig. 133). The indicator lamp (Fig. 133,1) on the switch must illuminate.

During hot air operation, the water in the hot water source is heated up by the heater and the circulating air.

Depending on the model, the vehicle is fitted with one or two hot water source drain cocks.

Switching on:

- Connect the vehicle to the external 230 V power supply and switch on the 230 V automatic circuit breaker.
- Switch on the operating switch (Fig. 133). Indicator lamp (Fig. 133,1) on the switch is illuminated. The water in the hot water source is heated up to 65 °C.

Switching off:

- Switch off the operating switch (Fig. 133). Indicator lamp (Fig. 133,1) on the switch goes off.

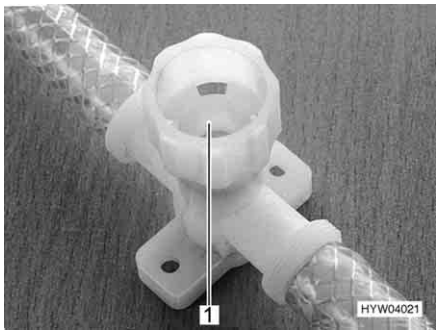

Fig. 134 Drain cock for hot water source

Filling the hot water source with water:

- Connect the vehicle to the external 230 V power supply and switch on the 230 V automatic circuit breaker.
- Switch off the operating switch (Fig. 133). Indicator lamp (Fig. 133,1) in the switch is not on.
- Close all drain cocks. To do this, close the caps (Fig. 134,1) by turning them in a clockwise direction.
- Set all the water taps to "Hot" and open them. The water pump is turned on. The warm water pipes are filled with water.
- Keep the taps open until the water flowing out of the taps has no bubbles in it. This is the only way to ensure that the hot water source is full of water.
- Close all water taps.

Emptying the hot water source:

- Switch off the 230 V power supply on the 230 V automatic circuit breaker.
- Open the stopper of the water tank.
- Open all water taps and set to the central position.
- Hang the shower handset up in the shower position.
- Hold the water pump up until the water pipes are completely empty.
- Open all drain cocks of the hot water source. To do this turn the caps (Fig. 134,1) in an anticlockwise direction.
- Check whether the water is completely drained from the hot water source.

▷ Further information can be obtained in the manufacturer's instruction manual.

9.5 Cooker

▶ Never let gas escape unburned due to danger of explosion.

▶ Before using the cooker make sure that there is sufficient ventilation. Open windows or the skylight.

▶ Do not use gas cooker or gas oven for heating.

- ▶ Do not fit any curtains in the immediate proximity of the cooker. Fire hazard!
- ▶ Always protect your hands with cooking gloves or potholders when handling hot pots, pans and similar items. There is a risk of injury.

9.5.1 Gas cooker

- ▶ During activation and operation of the gas cooker, no flammable objects or highly inflammable objects such as dishcloths, napkins etc. must be near the gas cooker. Fire hazard!
- ▶ The process of ignition must be visible from above and must not be covered by cooking pans placed on the cooker.
- ▶ If there is a flame protection, always put it up when using the gas cooker.
- ▶ Depending on the model, the gas cooker lid is held closed by a spring. When closing there is danger of getting injured!

- ▷ Do not use the glass gas cooker lid as a hob.
- ▷ Do not close the gas cooker lid while the gas cooker is in operation.
- ▷ Do not apply pressure on the gas cooker lid when it is closed.
- ▷ Do not place hot cooking pans on the gas cooker lid.
- ▷ Keep the gas cooker lid open after cooking until the burners are cool. Otherwise the glass plate could shatter.

- ▷ Only use pots and pans whose diameter is appropriate for the gas cooker burners.
- ▷ When the flame goes out, the thermocouple automatically cuts the gas supply.
- ▷ Further information can be obtained in the manufacturer's instruction manual.

The vehicle kitchen unit is fitted with a three-burner gas cooker.

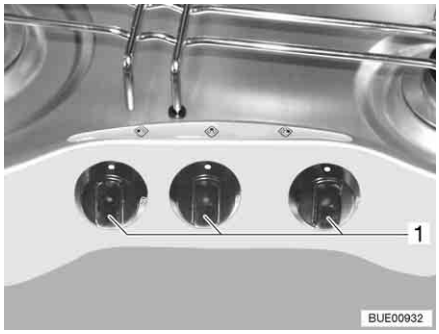

Fig. 135 Operating controls for gas cooker

Switching on:

- ■ Open the regulator tap on the gas bottle and the gas isolator tap "Cooker".
- ■ Open the gas cooker lid.
- ■ Depending on the model, fold out or set up the flame protection.
- ■ Turn the control knob (Fig. 135,1) on the burner you wish to use to the ignition position (large flame).
- ■ Press the control knob down and hold it.

- Light the burner with a gas lighter, a match or other suitable means of lighting.
- Once the flame is burning, the control knob must be held down for 10 to 15 seconds, until the thermocouple automatically keeps the gas supply open.
- Release the control knob and turn to the desired setting.
- If ignition is unsuccessful, repeat the entire procedure.

Switching off:

- Turn the control knob to the 0-position. The flame fades.
- Close the gas isolator tap "Cooker" and the regulator tap on the gas bottle.

9.5.2 Gas oven (Dometic) (special equipment)



- ▶ Keep the ventilation openings on the gas oven open at all times.
- ▶ There must be no flammable objects near the gas oven when it is being lit.
- ▶ If ignition has not taken place, repeat the entire procedure. If necessary, check if there is gas and/or current in the gas oven.
- ▶ If the gas oven still does not work, close the gas isolator tap and notify your service centre.
- ▶ If the burner flame is accidentally extinguished, turn the control knob to "○" and leave the burner off for at least 1 minute. Then ignite it again.



- ▷ Depending on the model the gas oven may come equipped with a grill.
- ▷ Before using the gas oven for the first time run it for 30 minutes at maximum temperature without any contents.
- ▷ When the flame goes out, the thermocouple automatically cuts the gas supply.
- ▷ Further information can be obtained from the separate instruction manual "Gas oven".

The oven is equipped with electronic ignition.



Fig. 136 Gas oven (Dometic)

Switching on:

- Open the regulator tap on the gas bottle and the gas isolator tap "Oven".
- Gently press the control knob (Fig. 136,1) and turn left to any position.
- Press the control knob and hold it down for 5 to 10 seconds. Ignition will take place automatically.
- Release the control knob and turn to the desired setting.

Switching off:

- Turn the control knob (Fig. 136,1) to "O". The flame fades.
- Close the gas isolator tap "Oven" and the regulator tap on the gas bottle.

9.5.3 Microwave oven (special equipment)



- ▶ Only qualified personnel may repair the microwave oven. Improper repairs can cause major risks to the user.
- ▶ The protection device against the escape of microwave energy should never be removed.
- ▶ Use the microwave oven only if it has been properly installed.
- ▶ Only use the microwave oven when the door seal is free of damage.
- ▶ Never leave the microwave oven unattended when it is in operation.
- ▶ If there is smoke, keep the microwave oven closed, switch it off and interrupt the power supply.



- ▷ Operate the microwave oven only with the rotary plate and the rotary cross in place.
- ▷ Use only crockery suitable for microwave use.



- ▷ The microwave oven only functions with correct 230 V power supply. In the case of fluctuations of the voltage or of voltage below 230 V, the microwave oven switches itself off completely. Therefore, do not switch on additional 230 V appliances when the microwave oven is in operation. Particularly in southern countries it happens that the line voltage is described as having 230 V but it really does not amount to this value. So it may happen that the microwave oven cannot be operated in these countries.
- ▷ Further information can be obtained in the manufacturer's instruction manual.

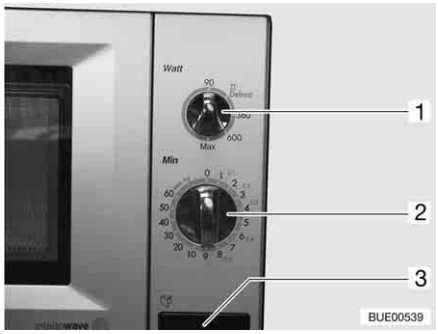

Fig. 137 Operating controls for microwave oven

Switching on:

- Press the key (Fig. 137,3) to open the door and place food into the cooking area.
- Close the door. A clicking noise can be heard when it engages.
- Select the output on the control knob (Fig. 137,1).
- Select the cooking time with the control knob (Fig. 137,2). Cooking begins.

The end of the cooking process is signalled by a signal tone. The microwave oven will switch off automatically.

Switching off:

- Press the key (Fig. 137,3) to open the door and take out the food.

9.5.4 Extractor hood (special equipment)

The cooking area is equipped with an extractor hood. The powerful fan blows the cooking steam directly outside. To switch on the extractor hood, press the flip switch.

9.6 Refrigerator

During the journey, only operate the refrigerator via the 12 V power supply. At high ambient temperatures the refrigerator is unable to reach its full cooling power. At high external temperatures, the full cooling power of the cooling unit is only guaranteed if the refrigerator is ventilated sufficiently. In order to achieve a better ventilation the refrigerator ventilation grill can be removed.

9.6.1 Refrigerator ventilation grill

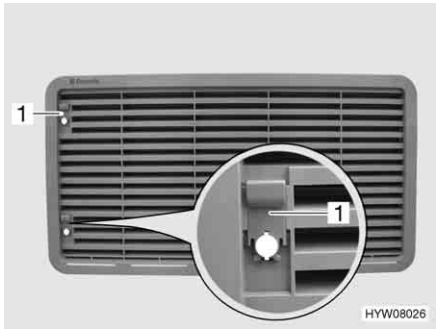

Fig. 138 Refrigerator ventilation grill (with sliding trap)

Removal:

- Push sliding trap (Fig. 138,1) upward.
- Remove refrigerator ventilation grill.



Fig. 139 Refrigerator ventilation grill (with screw)

Removal:

- Turn screw (Fig. 139,1) one quarter turn using a coin.
- Remove refrigerator ventilation grill.

9.6.2 Operation (Dometic 7 series, manual ignition)

Operating modes

The refrigerator has 2 operating modes:

- Gas operation
- Electrical operation (230 V AC or 12 V DC)

The operating mode is set with the operating controls on the refrigerator panel.

Infinitely variable regulation of the cooling power is only possible with gas operation and when the refrigerator is operated with 230 V. It is not possible with 12 V operation.

▷ Select only one energy source.

Gas operation

► Never let gas escape unburned due to danger of explosion.
► It is not permitted to operate the refrigerator with car gas.

▷ Before starting up the refrigerator with gas, remove the two louvered panel covers (SE) for the refrigerator on the outside of the vehicle.

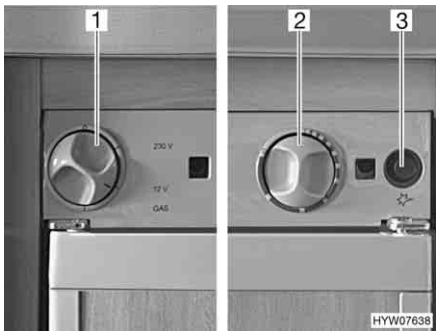

1 Energy selector switch
2 Control knob for setting the temperature
3 Gas ignition button

Fig. 140 Operating controls for the refrigerator (Dometic 7 series)

Switching on:

- Open the regulator tap on the gas bottle and the gas isolator tap "Refrigerator".
- Set the energy selector switch (Fig. 140,1) to "GAS".
- Press the control knob (Fig. 140,2), turn it to the highest level and hold it down. Wait until gas gets into the burner.
- Press the gas ignition button (Fig. 140,3) repeatedly until the flame appears in the inspection glass (bottom left in the refrigerator).
- Keep the control knob (Fig. 140,2) pressed for another 10 to 15 seconds, then release it.
- Check in the inspection glass (bottom left-hand side in the refrigerator) whether the flame is visible.
- Adjust the refrigerating temperature with the control knob.
- If ignition is unsuccessful, repeat the entire procedure.

Switching off:

- Set energy selector switch to "O". Refrigerator is switched off.
- Close the gas isolator tap "Refrigerator" and the regulator tap on the gas bottle.

Electrical operation

▷ Close the gas isolator tap "Refrigerator" when the refrigerator is operated electrically.

The refrigerator can be operated with the following voltages:

- 230 V AC
- 12 V DC

Switching the 230 V operation on:

- Set energy selector switch (Fig. 140,1) to "230 V". The operating indicator lights up green.
- Use the control knob (Fig. 140,2) to adjust the refrigerating temperature.

Switching the 230 V operation off:

- Set energy selector switch to "O". Refrigerator is switched off.

Switching the 12 V operation on:

- Set energy selector switch (Fig. 140,1) to "12 V". The operating indicator lights up green.

Switching the 12 V operation off:

- Set energy selector switch to "O". Refrigerator is switched off.

When operated with 12 V, the refrigerator draws power from the starter battery of the towing vehicle. Therefore 12 V operation of the refrigerator is only possible while the engine of the towing vehicle is running. During prolonged driving breaks, change over to gas operation.

The thermostat is not activated during 12 V operation. The refrigerator operates continuously.

▷ Further information can be obtained in the device manufacturer's instruction manual.

9.6.3 Operation (Dometic 7 series with flame indicator)

Operating modes

The refrigerator has 2 operating modes:

- Gas operation
- Electrical operation (230 V AC or 12 V DC)

The operating mode is set with the operating controls on the refrigerator panel.

▷ Select only one energy source.

▷ Even when the 12 V power supply is switched off, a small electrical power flows which puts an extra load on the living area battery. Always switch off the refrigerator for a temporary lay-up.

Gas operation

▶ Never let gas escape unburned due to danger of explosion.

▶ It is not permitted to operate the refrigerator with car gas.

▷ Before starting up the refrigerator with gas, remove the two louvered panel covers (SE) for the refrigerator on the outside of the vehicle.

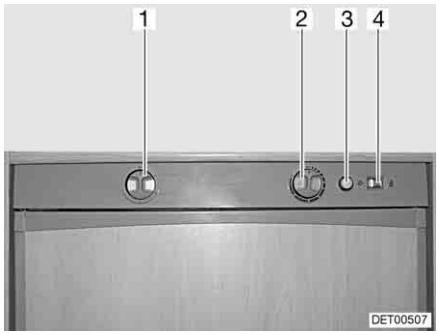

Fig. 141 Operating controls for the refrigerator (Dometic 7 series with manual ignition)

1 Energy selector switch
2 Control knob for setting the temperature
3 Gas ignition button
4 Flame indicator

Switching on:

- Open the regulator tap on the gas bottle and the gas isolator tap "Refrigerator".
- Set energy selector switch (Fig. 141,1) to "GAS".
- Press the control knob (Fig. 141,2), turn it to the highest level and hold it down. Wait until gas gets into the burner.
- Press the gas ignition button (Fig. 141,3) repeatedly until the flame appears in the inspection glass (bottom left in the refrigerator).
- Keep the control knob (Fig. 141,2) pressed down until the flame indicator (Fig. 141,4) becomes green and then release it.
- Check in the inspection glass (bottom left-hand side in the refrigerator) whether the flame is visible.
- Adjust the refrigerating temperature with the control knob.
- If ignition is unsuccessful, repeat the entire procedure.

Switching off:

- Set energy selector switch to "O". Refrigerator is switched off.
- Close the gas isolator tap "Refrigerator" and the regulator tap on the gas bottle.

Electrical operation



▷ Close the gas isolator tap "Refrigerator" when the refrigerator is operated electrically.

The refrigerator can be operated with the following voltages:

- 230 V AC
- 12 V DC

Switching the 230 V operation on:

- Set energy selector switch (Fig. 141,1) to "230 V".
- Use the control knob (Fig. 141,2) to adjust the refrigerating temperature.

Switching the 230 V operation off:

- Set energy selector switch to "O". Refrigerator is switched off.

Switching the 12 V operation on:

- Set energy selector switch (Fig. 141,1) to "12 V".
- Use the control knob (Fig. 141,2) to adjust the refrigerating temperature.

Switching the 12 V operation off:

- Set energy selector switch to "O". Refrigerator is switched off.

When operated with 12 V, the refrigerator draws power from the starter battery of the towing vehicle. Therefore 12 V operation of the refrigerator is only possible while the engine of the towing vehicle is running. During prolonged driving breaks, change over to gas operation.

▷ Further information can be obtained from the separate instruction manual "Refrigerator".

9.6.4 Operation (Dometic 7 series with frame heater)

Volume Model RM 7651: 150 l (arched door)

Operating modes The refrigerator has 2 operating modes:

- Gas operation
- Electrical operation (230 V AC or 12 V DC)

The operating mode is set with the operating controls on the refrigerator panel.

▷ Select only one energy source.

Gas operation

▶ Never let gas escape unburned due to danger of explosion.

▶ It is not permitted to operate the refrigerator with car gas.

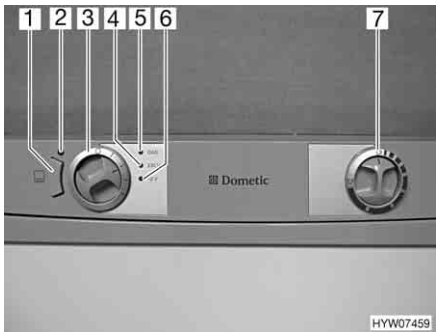

1 Frame heater (FH) button
2 Indicator lamp, frame heater
3 Energy selector switch
4 "230 V" operating indicator
5 "GAS" operating indicator
6 "12 V" operating indicator
7 Control knob for setting the temperature

Fig. 142 Operating controls for the refrigerator (Dometic 7 series with FH)

Switching on:

- Open the regulator tap on the gas bottle and the gas isolator tap "Refrigerator".
- Set energy selector switch (Fig. 142,3) to "GAS".
- Set the control knob (Fig. 142,7) to maximum power. Gas supply is open. Ignition will take place automatically. A ticking sound can be heard until ignition has been completed successfully. The "GAS" operating indicator (Fig. 142,5) lights up yellow.
- Adjust the refrigerating temperature with the control knob.

Switching off:

- Set the energy selector switch (Fig. 142,3) to "O". Refrigerator is switched off.
- Close the gas isolator tap "Refrigerator" and the regulator tap on the gas bottle.

Electrical operation



▷ Close the gas isolator tap "Refrigerator" when the refrigerator is operated electrically.

The refrigerator can be operated with the following voltages:

- 230 V AC
- 12 V DC

Switching the 230 V operation on:

- Set energy selector switch (Fig. 142,3) to "230 V". The "230 V" operating indicator (Fig. 142,4) lights up green.
- Use the control knob (Fig. 142,7) to adjust the refrigerating temperature.

Switching the 230 V operation off:

- Set energy selector switch to "O". Refrigerator is switched off.

Switching the 12 V operation on:

- Set energy selector switch (Fig. 142,3) to "12 V". The "12 V" operating indicator (Fig. 142,6) lights up green.
- Use the control knob (Fig. 142,7) to adjust the refrigerating temperature.

Switching the 12 V operation off:

- Set energy selector switch to "O". Refrigerator is switched off.

When operated with 12 V, the refrigerator draws power from the starter battery of the towing vehicle. Therefore 12 V operation of the refrigerator is only possible while the engine of the towing vehicle is running. During prolonged driving breaks, change over to gas operation.

Frame heater (FH)



▷ If the frame heater is switched on, it will always consume current. Therefore, switch off the frame heater if the engine of the towing vehicle is off and the vehicle is not connected to the 230 V power supply.

High external temperatures and high humidity can cause drops of water to form on the metal frame of the freezer compartment. This is why the refrigerator is equipped with a frame heater for the freezer compartment. If the temperature and humidity are high, switch on the frame heater by pressing the button (Fig. 142,1). This prevents corrosion. If the frame heater is switched on, the indicator lamp (Fig. 142,2) will be lit.



▷ Further information can be obtained from the separate instruction manual "Refrigerator".

9.6.5 Operation (Dometic 8 series)

Operating modes

The refrigerator has 2 operating modes:

- Gas operation
- Electrical operation (230 V AC or 12 V DC)

The operating mode is set with the operating controls on the refrigerator panel.



▷ Select only one energy source.

Gas operation



▶ Never let gas escape unburned due to danger of explosion.

▶ It is not permitted to operate the refrigerator with car gas.

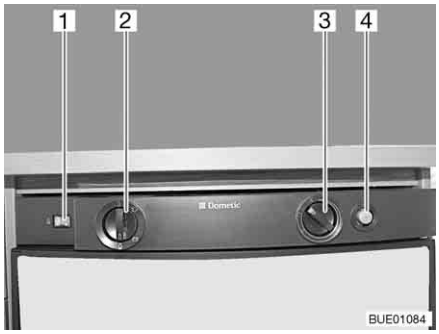

1 Flame indicator
2 Energy selector switch
3 Control knob for setting the temperature
4 Gas ignition button

Fig. 143 Operating controls for the refrigerator (Dometic 8 series)

Switching on:

- Open the regulator tap on the gas bottle and the gas isolator tap "Refrigerator".
- Set the energy selector switch (Fig. 143,2) to "⌂".
- Press the control knob (Fig. 143,3), turn it to the highest level and hold it down. Wait until gas gets into the burner.
- Press the gas ignition button (Fig. 143,4) and keep it pressed. Ignition will take place automatically.
- Keep gas ignition button (Fig. 143,4) pressed down until the flame indicator (Fig. 143,1) becomes green and then release it.
- Keep the control knob (Fig. 143,3) pressed for another 10 to 15 seconds, then release it.
- Adjust the refrigerating temperature with the control knob.

Switching off:

- Set energy selector switch to "○". Refrigerator is switched off.
- Close the gas isolator tap "Refrigerator" and the regulator tap on the gas bottle.

Electrical operation



▷ Close the gas isolator tap "Refrigerator" when the refrigerator is operated electrically.

The refrigerator can be operated with the following voltages:

- 230 V AC
- 12 V DC

Switching the 230 V operation on:

- Set the energy selector switch (Fig. 143,2) to "⏚".
- Use the control knob (Fig. 143,3) to adjust the refrigerating temperature.

Switching the 230 V operation off:

- Set energy selector switch to "O". Refrigerator is switched off.

Switching the 12 V operation on:

- Set the energy selector switch (Fig. 143,2) to "⎓".
- Use the control knob (Fig. 143,3) to adjust the refrigerating temperature.

Switching the 12 V operation off:

- Set energy selector switch to "O". Refrigerator is switched off.

When operated with 12 V, the refrigerator draws power only from the starter battery of the towing vehicle. The starter battery of the towing vehicle only supplies the refrigerator with 12 V when the vehicle engine is running and the alternator receives adequate voltage. When the vehicle engine is not running, the refrigerator is cut off from the power supply in the living area. For this reason, change over to gas operation during prolonged driving breaks.

▷ Further information can be obtained in the device manufacturer's instruction manual.

9.6.6 Refrigerator door locking mechanism

With some models, the refrigerator has a separate freezer compartment. The specifications in this section correspondingly also apply to the door of the freezer compartment.

▷ During the journey the refrigerator door must always be closed and locked in the closed position.

▷ Lock the refrigerator door in ventilation position when the refrigerator is switched off. This prevents mould forming.

There are two positions for locking the refrigerator door in place:

- Closed refrigerator door during travel and when the refrigerator is in operation
- Slightly opened refrigerator door as a ventilation position when the refrigerator is switched off

Dometic 7 series

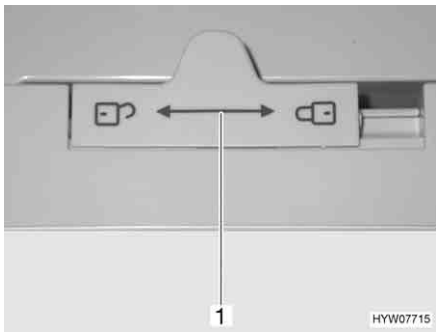

Fig. 144 Locking of the refrigerator door (Dometic 7 series)

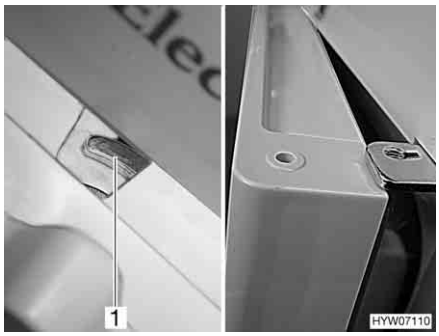

Fig. 145 Refrigerator door in ventilation position (Dometic 7 series)

Opening:

- Push the lock (Fig. 144,1) to the left "🔓".
- Use recessed grip to open refrigerator door.

Closing:

- Fully close the refrigerator door.
- Push the lock (Fig. 144,1) completely to the right "🔒".

Locking in the ventilation position:

- Slightly open refrigerator door.
- Push the lock completely to the right. The door latch (Fig. 145,1) keeps the refrigerator door in a fixed position. The refrigerator door will then stay slightly open (Fig. 145).

Dometic 7 series with separate freezer compartment

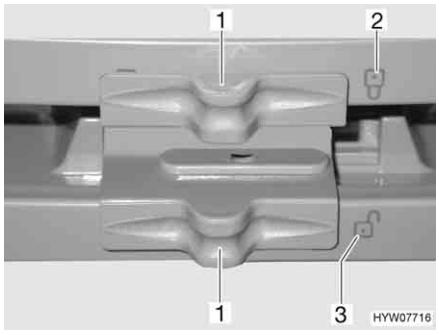

Fig. 146 Locking of the refrigerator door/freezer compartment door (Dometic 7 series with separate freezer compartment)

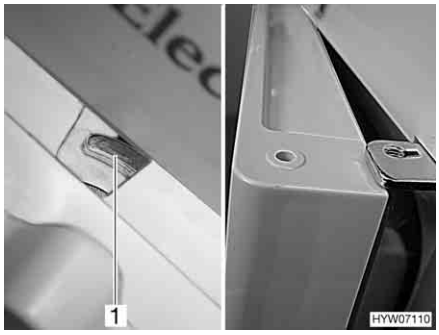

Fig. 147 Refrigerator door/freezer compartment door in ventilation position (Dometic 7 series with separate freezer compartment)

Opening:

- Push the lock (Fig. 146,1) to the side, so that the open lock "🔓" (Fig. 146,3) is completely visible.
- Use recessed grip to open refrigerator door/freezer compartment door.

Closing:

- Fully close the refrigerator door/freezer compartment door.
- Push the lock (Fig. 146,1) to the side, so that the closed lock "🔒" (Fig. 146,2) is completely visible.

Locking in the ventilation position:

- Slightly open refrigerator door/freezer compartment door.
- Push the lock completely to the right. The door latch (Fig. 147,1) keeps the refrigerator door/freezer compartment door in a fixed position. The refrigerator door/freezer compartment door will then stay slightly open (Fig. 147).

Dometic 8 series



Fig. 148 Release button of the refrigerator door (Dometic 8 series)

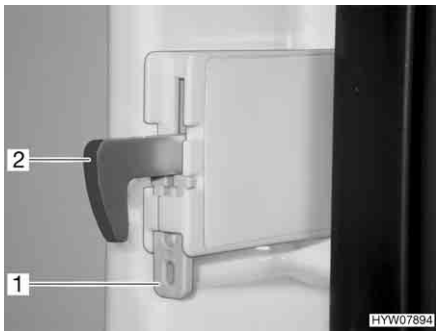

Fig. 149 Lock hook fixture

Opening:

- Press the release button (Fig. 148,1) and open the refrigerator door.

Closing:

- Close the refrigerator door. The lock hook engages audibly.

When the vehicle has been positioned, the lock hook can be fixed. The refrigerator door can now be opened without having to press the release button.

Fixing the lock hook:

- Press the fixture (Fig. 149,1) upwards. The lock hook (Fig. 149,2) is pressed upwards and has no function.

Unlocking the lock hook:

- Push the lock hook (Fig. 149,2) down. The lock hook functions again.

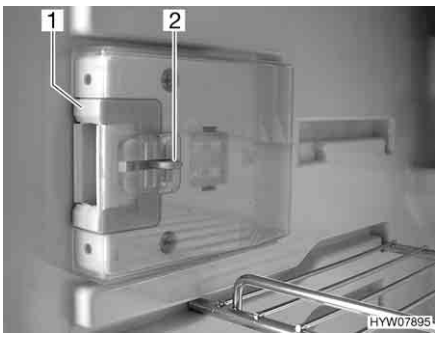

Fig. 150 Locking device in normal position

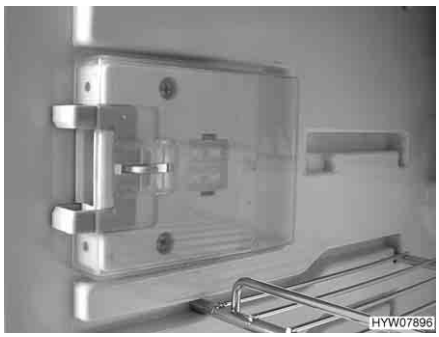

Fig. 151 Locking device in ventilation position

Locking in the ventilation position:

- Open the refrigerator door.
- Press down the unlocking device (Fig. 150,2).
- Push locking device (Fig. 150,1) forwards (Fig. 151).

If the refrigerator door is closed now, a gap will remain between the refrigerator door and the refrigerator.

Chapter overview

This chapter contains instructions regarding the sanitary fittings of the caravan.

The instructions address the following topics:

- water tank
- waste water tank
- complete water system
- toilet compartment
- toilet

10.1 Water supply, general



- ▶ Fill water tank from supply systems that have been verified to provide drinking water quality.
- ▶ Only use such hoses or containers when filling that have been approved for use with drinking water.
- ▶ Thoroughly rinse filling hose or container with drinking water before use (2 to 3 times capacity).
- ▶ Empty filling hose or container completely after use and close openings of the filling hose or container.
- ▶ Water left standing in the water tank or in the water pipes becomes undrinkable after a short period. Therefore, before each use of the vehicle, thoroughly clean the water pipes and the water tank. After each use of the vehicle completely empty the water tank and the water pipes.
- ▶ In the case of lay-ups lasting more than a week disinfect the water system before using the vehicle.



- ▷ If the vehicle is not used for several days or if it is not heated when there is a risk of frost, empty the entire water system. Leave the water taps on in central position. Leave the safety/drainage valve (if there is one) and all drain cocks open. Frost damage to appliances, frost damage to the vehicle and deposits in water-carrying components can be avoided in this way.
- ▷ The water pump will overheat without water and can get damaged. Never operate water pump when the water tank is empty.

The vehicle is equipped with a fitted water tank. An electric water pump pumps the water to the individual water taps. Opening a water tap automatically switches on the water pump and pumps water to the tap.

A canister or a waste water tank collects the waste water.



- ▷ Before using the water fittings: Connect the 230 V power supply and switch on the 230 V automatic circuit breaker, or connect the caravans electrics to the towing vehicle. Otherwise the water pump will not work. (This only applies to caravans that are not equipped with a separate battery.)
- ▷ When the water tank is re-filled, an air bubble may form at the bottom of the pump. This air bubble will prevent water from being drawn in. Shake the water pump up and down energetically in the water.

10.2 Water tank

10.2.1 Water tank 16 l

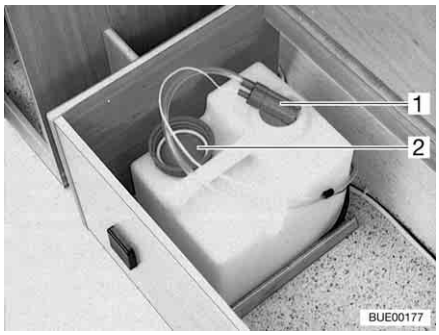

Fig. 152 Water tank 16 l

When transporting the water tank, close it with the cap (Fig. 152,2).

Filling the water tank with drinking water:

- Pull the water pump (Fig. 152,1) out of the water tank.
- Remove the water tank.
- Clean or disinfect water tank.
- Fill the water tank with drinking water.

Pouring water:

- Open the water taps.

Emptying the water tank:

- Pull the water pump out of the water tank.
- Remove the water tank and empty it.

10.2.2 Water tank 22 l with external flap (special equipment)

The water tank is mobile or portable.

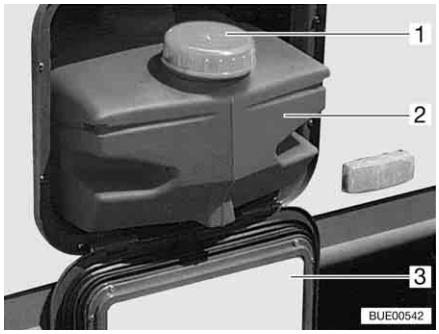

Fig. 153 Water tank 22 l

When transporting the water tank, close it with the cap (Fig. 153,1).

Filling the water tank with drinking water:

- Close all water taps.
- Open service flap (Fig. 153,3) (see chapter 6).
- Pull the water pump out of the water tank.
- Pull out the water tank (Fig. 153,2).
- Clean or disinfect water tank.
- Fill the water tank with drinking water.

Pouring water:

- Open the water taps.

Emptying the water tank:

- Close all water taps.
- Open service flap (Fig. 153,3) (see chapter 6).
- Pull the water pump out of the water tank.
- Pull out the water tank (Fig. 153,2) and empty it.

10.2.3 Water tank 40 l (partially special equipment)

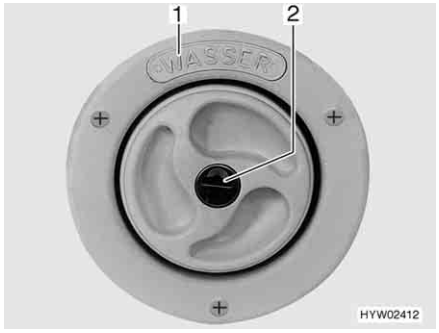

Fig. 154 Drinking water filler neck

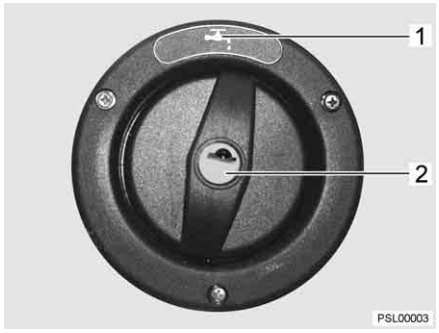

Fig. 155 Drinking water filler neck (alternative)

The drinking water filler neck is on the right or left side of the vehicle, depending on the model.

The drinking water filler neck is labelled by the word "WASSER" (water) (Fig. 154,1) or marked by the symbol "" (Fig. 155,1). The cap is open and closed using the key for the external flap locks.

The water tank is built into the seating group.



Fig. 156 Water tank

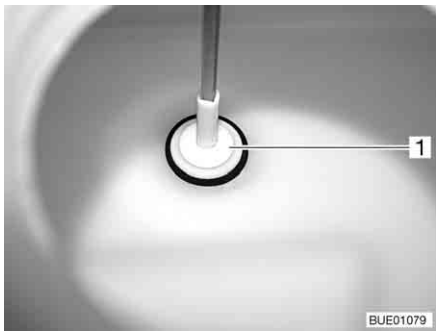

Fig. 157 Stopper

Filling the water tank with drinking water:

- Open drinking water filler neck (Fig. 154 or Fig. 155) (see chapter 6).
- Clean or disinfect water tank.
- Fill the water tank with drinking water.

Pouring water:

- Open the water taps.

Emptying the water tank:

- Close all water taps.
- Turn the handle (Fig. 156,1) on the water tank in an anticlockwise direction as far as it will go. The stopper (Fig. 157,1) at the bottom of the tank is lifted.
- Let the water drain out.
- Turn the handle (Fig. 156,1) on the water tank in a clockwise direction as far as it will go. The stopper at the bottom of the tank (Fig. 157,1) closes the drain.

10.3 Waste water tank (special equipment)

▶ Before commencing the journey, empty the waste water tank.

▷ If there is any risk of frost, empty the waste water tank.

▷ Never pour boiling water directly into the sink outlet. Boiling water could cause deformation and leaks in the waste water pipe system.

▷ Only empty the waste water tank at disposal stations, camping sites or caravan sites especially provided for this purpose.

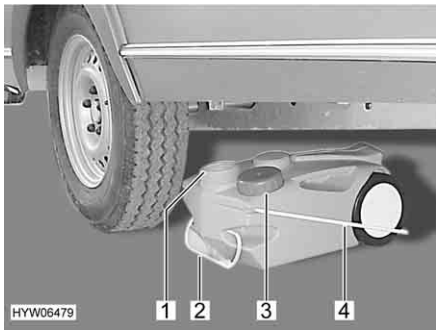

Fig. 158 Waste water tank, mobile

Emptying:

- Use the cap (Fig. 158,3) to close the opening of the waste water tank (Fig. 158,1).
- Use the handle (Fig. 158,2) to pull out the waste water tank.
- Fold the carrying handle (Fig. 158,4) up and upright the waste water tank.
- Completely empty the waste water tank at disposal stations that are especially provided for this purpose.

10.4 Filling the water system

▶ When filling the water tank, observe the maximum permissible gross weight of the vehicle. Luggage must be reduced accordingly when the water tank is full.

▷ The water pump will overheat without water and can get damaged. Never operate water pump when the water tank is empty.

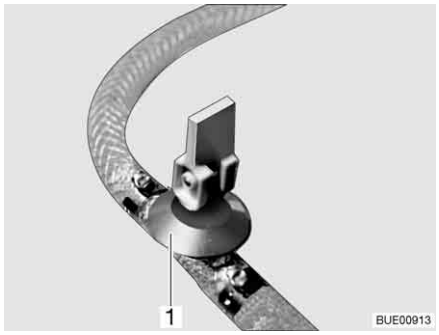

Fig. 159 Drain cock (with rocking lever)

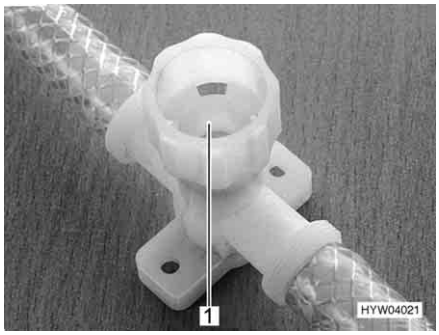

Fig. 160 Drain cock (with twist cap)

- Position the vehicle horizontally.
- Connect the 230 V power supply and switch on the 230 V automatic circuit breaker. If the vehicle is equipped with a self-sufficiency package with battery, it is not necessary to connect it to a 230 V power supply.
- Clean or disinfect water system.
- Close all water taps.
- Switch off the boiler.
- Close all drain cocks. To do this, position the drain cock's rocking lever (Fig. 159,1) horizontally or turn the drain cock's cap (Fig. 160,1) in a clockwise direction.
- Close the drainage opening of the water tank.
- Fill the water tank with drinking water. Use a water hose, a water canister with a funnel or similar for filling.
- Set all the water taps to "Hot" and open them. The water pump is turned on. The warm water pipes are filled with water.
- Keep the taps open until the water flowing out of the taps has no bubbles in it. This is the only way to ensure that the boiler is full of water.
- Set all water taps to "Cold" and leave them open. This will fill the cold water pipes with water.
- Keep the taps open until the water flowing out of the taps has no bubbles in it.
- Close all water taps.
- Check that the cap on the water tank is not leaking.

10.5 Emptying the water system



▷ If the vehicle is not used for several days or if it is not heated when there is a risk of frost, empty the entire water system. Leave the water taps on in central position. Leave the safety/drainage valve (if there is one) and all drain cocks open. Frost damage to appliances, frost damage to the vehicle and deposits in water-carrying components can be avoided in this way.



▷ Take note of the environmental tip in this chapter.

To empty and ventilate the water system, proceed as follows. Frost damage and deposits are avoided in this way:

- Position the vehicle horizontally.
- Switch off the 230 V power supply on the 230 V automatic circuit breaker.
- Open all drain cocks. To do this turn the drain cock's cap in an anticlockwise direction or set the drain cock's rocking lever in a vertical position.
- Open the drainage opening of the water tank.
- Set water tap in kitchen and shower compartment (toilet compartment) in an exact central position (hot – cold), and open.
- Hang the shower handset up in the shower position.
- Remove the cap of the water tank. Hold the water pump up until the water pipes are completely empty.
- Check whether the water tank is completely empty.
- Blow out the remaining water in the water pipes (max. 0.5 bar).
- Empty the waste water tank. Take note of the environmental tip in this chapter.
- Empty toilet cassette. Take note of the environmental tip in this chapter.
- After emptying, leave all water taps open in the central position.
- Leave all drain cocks open.

10.6 Toilet compartment



▷ Do not transport any loads in the shower tray. The shower tray or other items of equipment in the toilet compartment can be damaged.



▷ For ventilation purposes during or after a shower, and for drying wet clothing, close the toilet compartment door and open the window or the toilet compartment skylight. This improves the air circulation.

▷ Close the shower curtain completely when showering, so that no water is able to enter the area between the wash room wall and the shower tray.

▷ After taking a shower, rinse soap residue from the shower tray, otherwise cracks can appear in the shower tray over time.

▷ After using the shower, wipe it dry to prevent moisture from collecting.

▷ Further information about cleaning the toilet compartment can be found in the section 11.2.

10.7 Toilet



▷ If there is any risk of frost and the vehicle is not heated, empty the sewage tank (cassette).

▷ Do not sit on the lid of the toilet. The lid is not designed to bear the weight of a person and could break.

▷ Use a suitable chemical for this toilet. The ventilation will merely remove the odour but not germs and gases. Germs and gases will have a detrimental effect on the sealing rubbers.



▷ Further information can be obtained in the manufacturer's instruction manual.

▷ Only empty the sewage tank (cassette) at disposal stations, at camping sites or caravan sites, that are especially provided for this purpose.

Depending on the design, the toilet is flushed either directly via the vehicle's water system, or via a separate water tank.

10.7.1 Swivel toilet (Thetford C-200)

▷ The Thetford cassette can only be taken out if the sliding trap is closed.

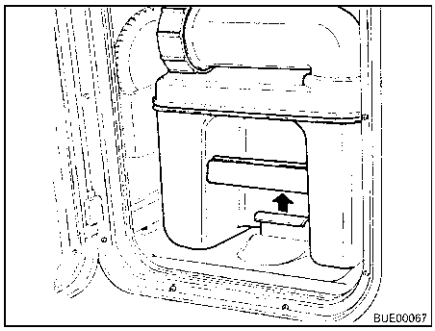

Fig. 161 Pulling the retaining clip

Preparing toilet:

- Open the flap for the Thetford cassette and pull the retaining clip upwards to remove the Thetford cassette.

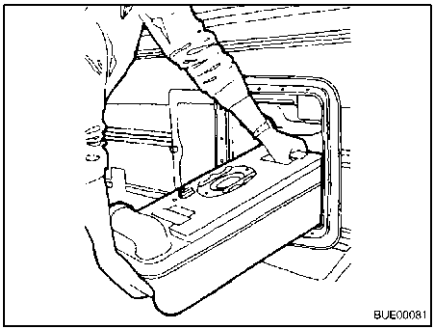

Fig. 162 Removing the Thetford cassette

- Pull out the Thetford cassette as far as it can go.
- Tip the Thetford cassette slightly and then pull it out completely.

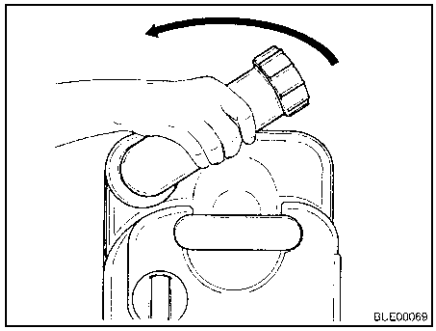

Fig. 163 Turning drainage neck

- Place the Thetford cassette upright.
- Turn the drainage neck upwards.
- Remove the cap of the drainage neck.

▷ Never put the sanitary liquid directly in the toilet bowl.

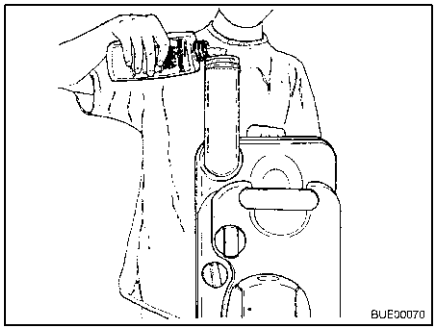

Fig. 164 Filling with sanitary liquid

- Fill the Thetford cassette with the specified quantity of sanitary liquid.
- Then add enough water to completely cover the bottom of the Thetford cassette.
- Close drainage neck with the cap.
- Return the drainage neck to its original position.

▷ When inserting, do not use force. The Thetford cassette can be damaged.

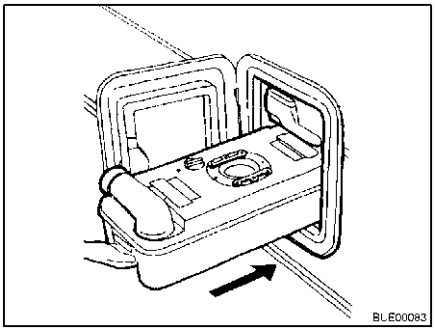

Fig. 165 Inserting the Thetford cassette

- Push the Thetford cassette back to its original position.

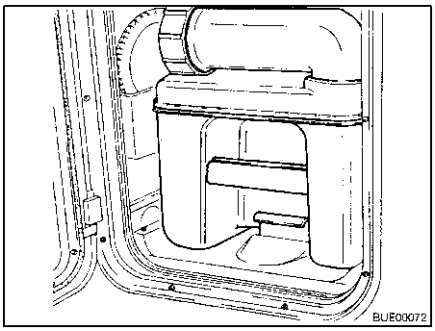

Fig. 166 Thetford cassette secured

- Ensure that the Thetford cassette is secured by the retaining clip.
- Lock the flap for the Thetford cassette.

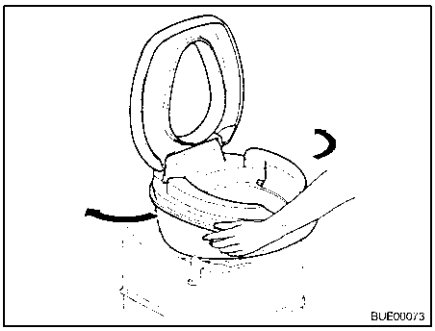

Fig. 167 Rotating the toilet bowl

Using the toilet:

- Move the toilet bowl into a convenient position.

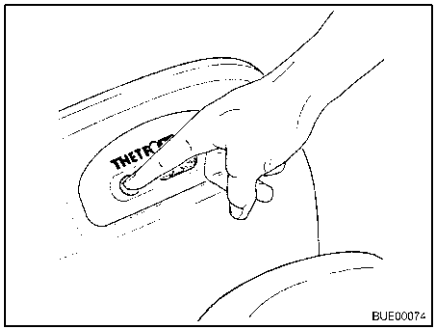

Fig. 168 Pre-flush

- Fill the toilet bowl with some water. Press the flush button. Flushing continues as long as the button is pressed.
- Use the toilet.

C-200 S cassette With the C-200 S cassette, proceed as follows to flush the toilet:

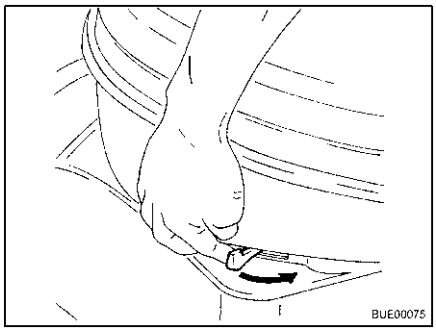

Fig. 169 Operating the sliding trap

- Open the sliding trap. To do this, turn the slide lever in an anticlockwise direction.

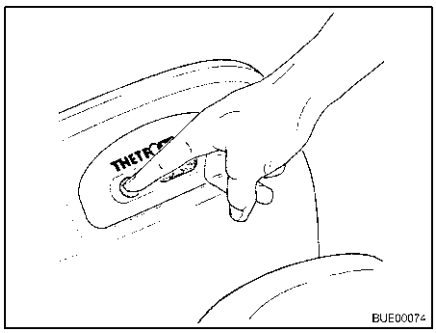

Fig. 170 Operating the flush

- Flush the toilet. Press the flush button.
- After flushing close the sliding trap.

C-200 E cassette With the C-200 E cassette, proceed as follows to flush the toilet:

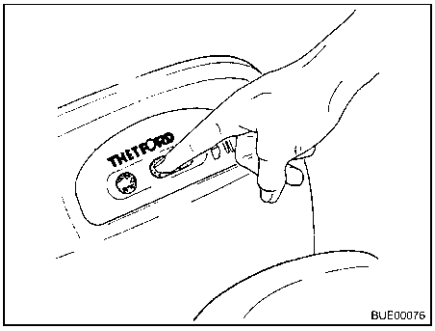

Fig. 171 Opening the sliding trap

- Open the sliding trap. To do this, press the left side of the sliding trap button.

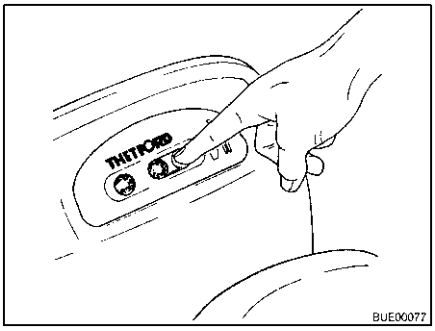

Fig. 172 Closing the sliding trap

- Flush the toilet. Press the flush button.
- After flushing close the sliding trap. To do this, press the right side of the sliding trap button.

▷ The Thetford cassette can only be taken out if the sliding trap is closed.

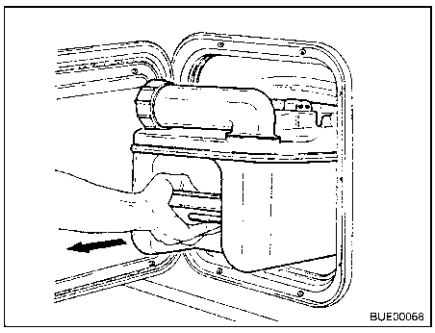

Fig. 173 Removing the Thetford cassette

Emptying the Thetford cassette:

- Open the flap for the Thetford cassette and pull the retaining clip upwards to remove the Thetford cassette.
- Pull out the Thetford cassette as far as it can go.
- Tip the Thetford cassette slightly and then pull it out completely.

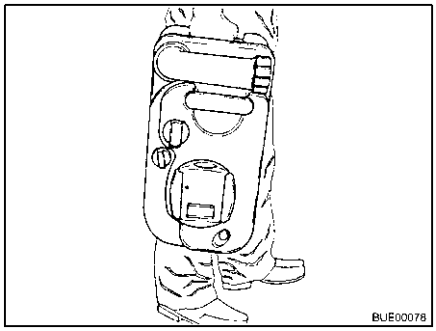

Fig. 174 Carrying the Thetford cassette

- Take the Thetford cassette to a proper disposal area. As you do this, point the drainage neck upwards.

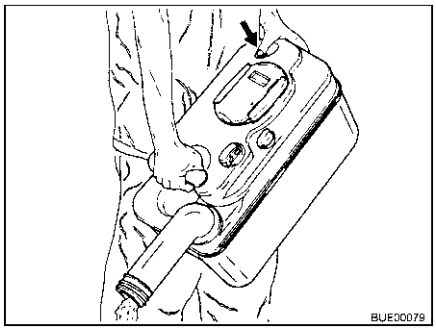

Fig. 175 Emptying the Thetford cassette

- Turn the drainage neck upwards.
- Remove the cap of the drainage neck.
- Point the Thetford cassette with the drainage neck downwards.
- Activate the aeration knob with your thumb. The Thetford cassette empties.
- Rinse the Thetford cassette thoroughly with fresh water.
- Close drainage neck with the cap.
- Return the drainage neck to its original position.

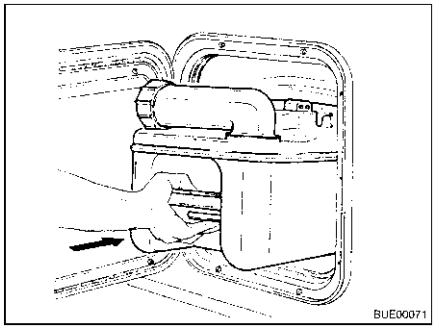

Fig. 176 Inserting the Thetford cassette

- Prepare the Thetford toilet for use.
- Push the Thetford cassette back to its original position.
- Ensure that the Thetford cassette is secured by the retaining clip.
- Lock the flap for the Thetford cassette.

10.7.2 Toilet with fixed seat (Thetford C-402)

The Thetford toilet of some models is equipped with its own water tank.

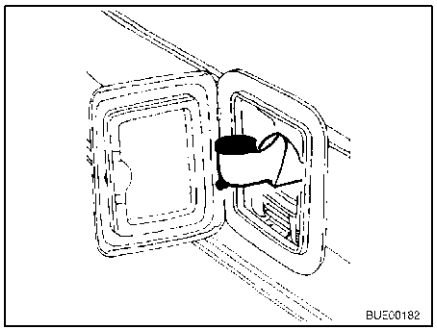

Fig. 177 Fresh water filler neck, swung out

Filling the water tank:

- Open the flap for the Thetford cassette.
- Swing the fresh water filler neck towards the outside.

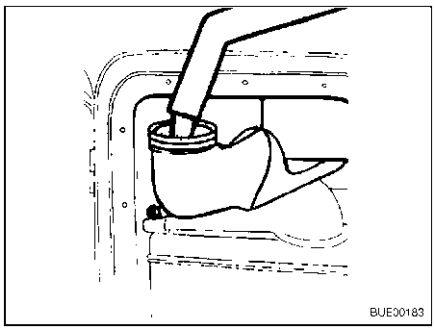

Fig. 178 Filling with fresh water

- Remove the screw cap.
- Fill with fresh water until the fluid level reaches the top edge. This corresponds to approx. 15 l.

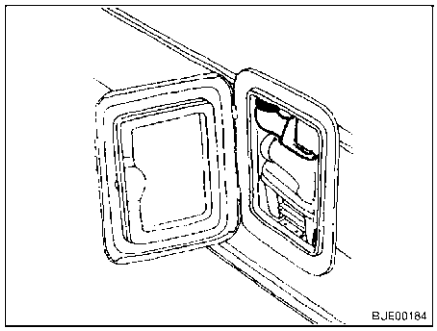

Fig. 179 Fresh water filler neck, swung in

- Close the screw cap.
- Swivel the fresh water filler neck inwards.

▷ The Thetford cassette can only be taken out if the sliding trap is closed.

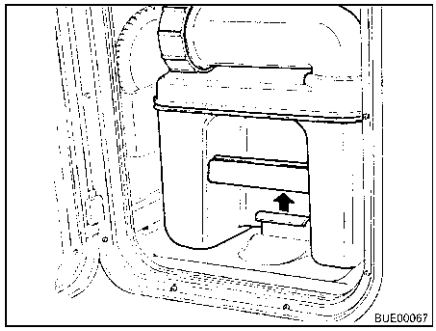

Fig. 180 Pulling the retaining clip

Preparing toilet:

- Open the flap for the Thetford cassette and pull the retaining clip upwards to remove the Thetford cassette.

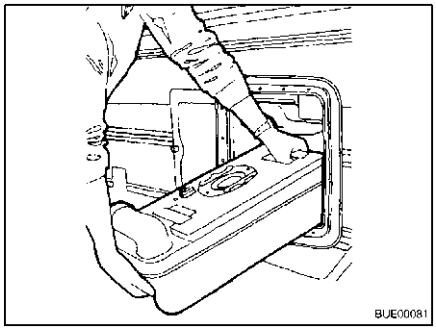

Fig. 181 Removing the Thetford cassette

- Pull out the Thetford cassette as far as it can go.
- Tip the Thetford cassette slightly and then pull it out completely.

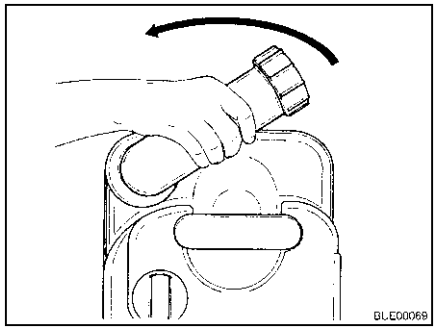

Fig. 182 Turning drainage neck

- Place the Thetford cassette upright.
- Turn the drainage neck upwards.
- Remove the cap of the drainage neck.



▷ Never put the sanitary liquid directly in the toilet bowl.

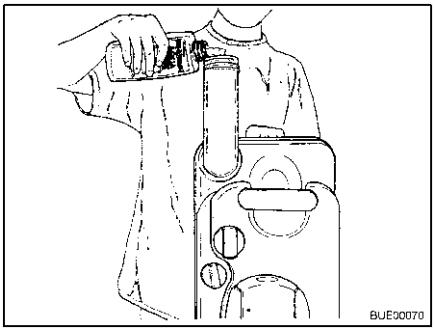

Fig. 183 Filling with sanitary liquid

- Fill the Thetford cassette with the specified quantity of sanitary liquid.
- Then add enough water to completely cover the bottom of the Thetford cassette.
- Close drainage neck with the cap.
- Return the drainage neck to its original position.



▷ When inserting, do not use force. The Thetford cassette can be damaged.

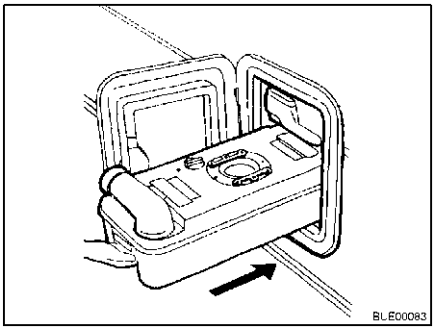

Fig. 184 Inserting the Thetford cassette

- Push the Thetford cassette back to its original position.

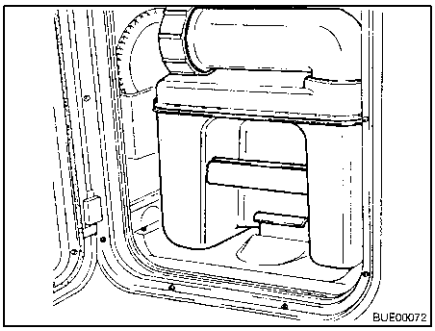

Fig. 185 Thetford cassette secured

- Ensure that the Thetford cassette is secured by the retaining clip.
- Lock the flap for the Thetford cassette.

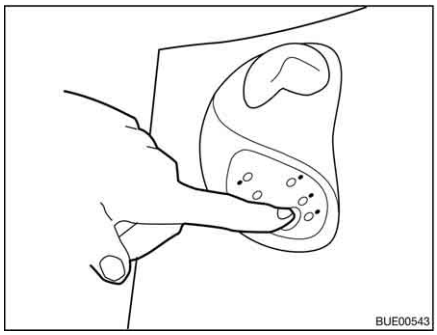

Fig. 186 Pre-flush

Using the toilet:

- Fill the toilet bowl with some water. Press the flush button. Flushing continues as long as the button is pressed.
- Use the toilet.

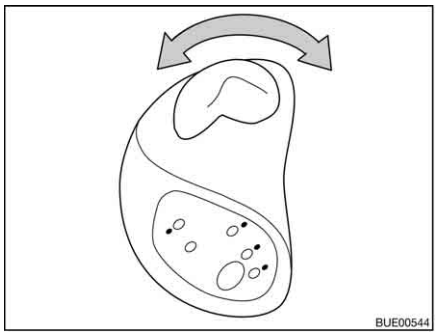

Fig. 187 Operating the sliding trap

- Open the sliding trap. To do this, turn the slide lever in an anticlockwise direction.

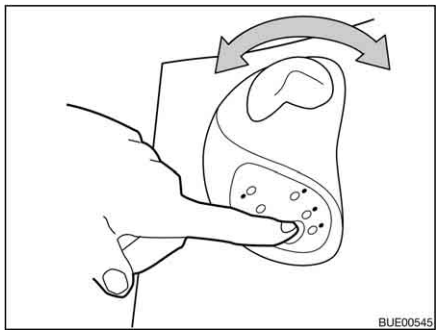

Fig. 188 Operating the flush

- Flush the toilet. Press the flush button.
- After flushing close the sliding trap again. To do this turn the slide lever in a clockwise direction.

▷ The Thetford cassette can only be taken out if the sliding trap is closed.

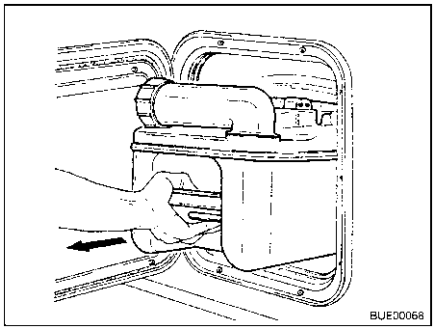

Fig. 189 Removing the Thetford cassette

Emptying the Thetford cassette:

- Open the flap for the Thetford cassette and pull the retaining clip upwards to remove the Thetford cassette.
- Pull out the Thetford cassette as far as it can go.
- Tip the Thetford cassette slightly and then pull it out completely.



Fig. 190 Transporting the Thetford cassette

- Place the Thetford cassette upright on the wheels.
- Press down the handle of the draw bar and move away from the Thetford cassette. The lock of the draw bar releases itself.
- Pull the draw bar out completely by the handle.
- Take the Thetford cassette to a proper disposal area.
- Insert the draw bar completely using the handle.

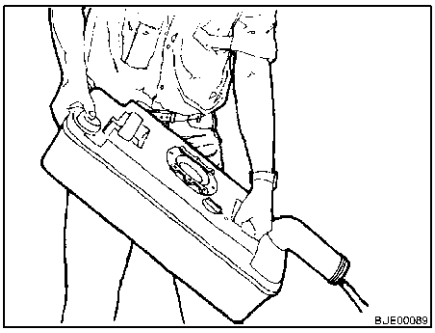

Fig. 191 Emptying the Thetford cassette

- Turn the drainage neck upwards.
- Remove the cap of the drainage neck.
- Point the Thetford cassette with the drainage neck downwards.

- Activate the aeration knob with your thumb. The Thetford cassette empties.
- Rinse the Thetford cassette thoroughly with fresh water.
- Close drainage neck with the cap.
- Return the drainage neck to its original position.

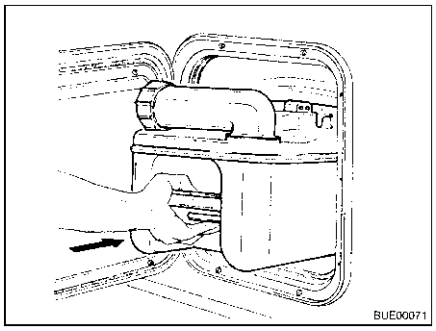

Fig. 192 Inserting the Thetford cassette

- Prepare the Thetford toilet for use.
- Push the Thetford cassette back to its original position.
- Ensure that the Thetford cassette is secured by the retaining clip.
- Lock the flap for the Thetford cassette.

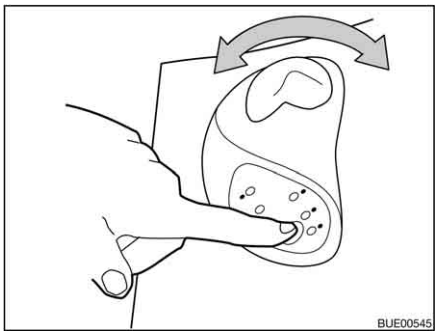

Fig. 193 Emptying the water tank

Emptying the water tank:

- Open the sliding trap. To do this, turn the slide lever in an anticlockwise direction.
- Press the flush button until water ceases to flow into the bowl.
- Close the sliding trap. To do this turn the slide lever in a clockwise direction.

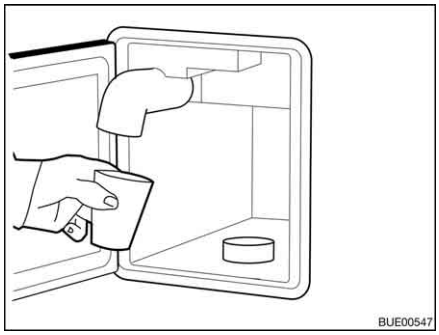

Fig. 194 Emptying the fresh water filler neck

- Open the flap for the Thetford cassette.
- Swing the fresh water filler neck towards the outside.
- Remove the screw cap from the fresh water filler neck.
- Turn the fresh water filler neck in an anticlockwise direction until the residual water flows out.
- Turn the fresh water filler neck back in a clockwise direction.
- Screw the screw cap onto the fresh water filler neck.
- Swivel the fresh water filler neck inwards.
- Empty Thetford cassette.

Chapter overview

This chapter contains instructions regarding the care of the vehicle.

The instructions address the following topics:

- exterior of the vehicle
- interior
- water system
- extractor hood
- air conditioning unit
- winter operation

At the end of the chapter there is a checklist of measures you must carry out if you are not going to use the vehicle for an extended period of time.

The checklist address the following topics:

- temporary lay-up
- winter lay-up
- start-up after a lay-up

11.1 External care

11.1.1 Washing with a high-pressure cleaner



▷ Do not clean the tyres with a high-pressure cleaner. The tyres might be damaged.

▷ Do not spray external applications (deco-films) directly with the high-pressure cleaner. The external applications could come off.

Before cleaning the vehicle with a high-pressure cleaner, observe the operating instructions of the high-pressure cleaner.

When cleaning with the nozzle for circular jet between the vehicle and the cleaning nozzle, maintain a minimum distance of approx. 700 mm.

Take into consideration that the jet of water comes out of the cleaning nozzle with pressure. The vehicle may be damaged by incorrect handling of the high-pressure cleaner. The temperature of the water should not be above 60 °C. Keep the jet of water in constant movement during the washing process. Do not direct the water jet at clearances, built-in electrical parts, plugs, seals, the ventilation grill or the skylights. The vehicle may be damaged or water may enter the interior.

11.1.2 Washing the vehicle



▷ Never clean the vehicle in the car wash. Water can enter the refrigerator grills, the waste gas vents, the ventilation of the extractor hoods or the forced ventilations. The vehicle could be damaged.

- Wash the vehicle only on a washing site intended for this purpose. Avoid full sunshine. Observe environmental measures.
- Only clean external applications and synthetic parts with plenty of warm water, dish washing liquid and soft cloth.
- Wash down the vehicle with plenty of water, a clean sponge or a soft brush. In the case of stubborn dirt add dish washing liquid to the water.
- Painted exterior walls may also be cleaned with a caravan cleaner.

- Add-on parts made of glass-fibre reinforced plastic (GRP) require a regular follow-up treatment with a polisher. This way these parts will not turn yellow and the sealing of the surface remains intact.
- Treat rubber seals of doors and storage flaps with talc.
- Treat locking cylinder of doors and storage flaps with graphite dust.

11.1.3 Windows of acrylic glass

Acrylic glass windows are delicate and require very careful handling.



▷ Never rub acrylic glass windows dry as dust particles might damage the surface!

▷ Only clean acrylic glass windows with plenty of warm water, some dish washing liquid and a soft cloth.

▷ Never use glass cleaning agents with chemical, abrasive or alcohol-containing additives. Premature brittleness of the panes and associated cracks may result from their use.

▷ Avoid contact of cleansing agents used for the body (e.g. tar- or silicone-removing agents) with acrylic glass.

▷ Do not clean vehicle in car wash.

▷ Do not attach stickers to the acrylic glass windows.

▷ Having cleaned the vehicle rinse acrylic glass with sufficient clear water.

▷ Treat rubber seals with glycerin.



▷ An acrylic glass cleanser with antistatic effect is suitable for a follow-up treatment. Small scratches can be treated with an acrylic glass polish. These agents are available at the accessories shop.

11.1.4 Hot galvanized chassis

Salt deposits damage the hot galvanized chassis and can cause white rust.

But so-called white rust represent no defects. It is only a visual damage.

The most frequent causes for white rust are:

- Abrasives and de-icing salts (e.g. when driving during winter months)
- Condensation (e.g. by covering the vehicle with plastic foils or awning)
- Humidity (e.g. by parking the vehicle in high grass, in puddles or sludge)
- Cleaning agents (e.g. by cleaning with aggressive cleaning agents)
- Snow (e.g. by standing too long in snow)
- Defective ventilation (e.g. by covering with aprons in the floor area)

To avoid formation of white rust or to remove any existing white rust, we recommend the following method:

- After driving in winter, rinse out the hot galvanized surfaces with clean water.
- If hot galvanized parts are affected by white rust, clean with a zinc cleaner (e.g. Poligrat).

11.1.5 Underbody

The underbody of the vehicle is partly coated with an age-resistant underbody protection. Should the underbody protection be damaged, repair immediately. Do not treat areas coated with underbody protection with spray oil.

▷ Only use products approved by the manufacturer. Our authorised dealers and service centres will be happy to advise you.

11.1.6 Waste water tank

Clean the waste water tank after every use of the vehicle.

Cleaning:

- Empty the waste water tank.
- Open the cleaning opening on the waste water tank.
- Thoroughly rinse out the waste water tank with fresh water.

11.2 Interior care

▷ If possible, treat stains immediately.

▷ Acrylic glass windows are delicate and require very careful handling (see section 11.1.3).

▷ Synthetic parts in the toilet and living area are very delicate and should be treated with care. Do not use solvents, alcohol-containing cleansers or scourers containing sand. This procedure will help you to avoid brittleness and formation of cracks.

▷ Do not pour any corrosive agents into the drain holes. Never pour boiling water directly into the drain holes. Corrosive agents and boiling water cause damage to drainage pipes and siphon traps.

▷ Do not use vinegar based products to clean the toilet and water system, or for decalcification of the water system. Vinegar-based products may cause damage to seals or parts of the installation. Use standard decalcifying products for decalcification.

▷ Save water. Mop up all remaining water.

▷ Vacuum off carpets and cushions with a suitable brush attachment.

▷ For information about the use of maintenance products, our representatives and service centres will be glad to advise.

- Surface and knobs of furniture, lamps and synthetic parts in the toilet and living area should be cleaned with water and a wool cloth. A mild cleanser may be added to the water. If required, use furniture polish for the painted surfaces.
- Clean upholstery with dry foam specially manufactured for the use on upholstery or with the foam of a mild detergent. Do not wash upholstery. Always have it cleaned. Protect upholstery from direct sunlight so that it does not loose its colour.
- Clean upholstery made of novalife® with clear water only.
- Leather covers should be cleaned with a cotton cloth and a mild soap (curd soap). Make sure that the leather is not soaked through and that no water seeps through the seams of the leather covers.
- Curtains and net curtains should be dry cleaned.
- Vacuum clean the carpet, if necessary clean with carpet shampoo.
- Clean PVC-floor covering with a mild, soapy cleanser for PVC floors. Do not place carpet on wet PVC-floor covering. The carpet and the PVC-floor covering may stick together.

- Never clean the sink or the gas cooker with a scourer. Avoid anything which may cause scratching or grooves.
- Clean gas cooker only with a moist cloth. Prevent any water from penetrating the gas cooker. Water may damage the gas cooker.
- Brush insect screens on doors, windows and skylights with a soft brush or vacuum with the brush attachment of the vacuum cleaner.
- Brush blinds with a soft brush or vacuum with the brush attachment of the vacuum cleaner. Grease or stubborn dirt may be removed with a mild soap at 30 °C (curd soap).
- Brush Roman shades with a soft brush or vacuum with the brush attachment of the vacuum cleaner. Grease or stubborn dirt may be removed with a mild soap at 30 °C (curd soap).

11.3 Water system

11.3.1 Cleaning the water tank

- Empty the water tank and close the drainage opening.
- Remove the cap of the water tank.
- Fill water tank with water and some washing-up liquid (do not use any scourers).
- Using a trade standard brush for washing dishes, scrub the water tank until there is no longer any visible deposit.
- Scrub also the pump housing.
- If possible, clean fresh water sensors through the cleaning openings by hand.
- Rinse water tank with copious amounts of drinking water.

11.3.2 Cleaning the water pipes



▷ Only use suitable cleaning agents as sold by the specialist trade.



▷ Collect any emerging mixture of water and cleaning agent for correct disposal.

- Empty the water system.
- Close all drain holes and drain cocks.
- Fill mixture of water and cleaning agent into the water tank. Observe the manufacturer's instructions regarding the mixing ratio.
- Open the drain cocks one by one.
- Leave the drain cocks open until the mixture of water and cleaning agent has reached the respective drain.
- Close the drain cocks.
- Set all the water taps to "Hot" and open them.
- Leave the drain cocks open until the mixture of water and cleaning agent has reached the drain.
- Set all water taps to "Cold" and open them.

- Leave the drain cocks open until the mixture of water and cleaning agent has reached the drain.
- Close all water taps.
- Flush the toilet several times.
- Allow the cleaning agent to act in accordance with the manufacturer's instructions.
- Empty the water system. Collect the mixture of water and cleaning agent for correct disposal.
- For rinsing fill the entire water system with drinking water and empty again several times over.

11.3.3 Disinfecting the water system



▷ Only use suitable disinfectants as sold by the specialist trade.



▷ Collect any emerging mixture of water and disinfectant for correct disposal.

- Empty the water system.
- Close all drain holes and drain cocks.
- Fill mixture of water and disinfectant into the water tank. Observe the manufacturer's instructions regarding the mixing ratio.
- Open the drain cocks one by one.
- Leave the drain cocks open until the mixture of water and disinfectant has reached the respective drain.
- Close the drain cocks.
- Set all the water taps to "Hot" and open them.
- Leave the drain cocks open until the mixture of water and disinfectant has reached the drain.
- Set all water taps to "Cold" and open them.
- Leave the drain cocks open until the mixture of water and disinfectant has reached the drain.
- Close all water taps.
- Flush the toilet several times.
- Allow the disinfectant to act in accordance with the manufacturer's instructions.
- Empty the water system. Collect the mixture of water and disinfectant for correct disposal.
- For rinsing fill the entire water system with drinking water and empty again several times over.

11.4 Extractor hood

Clean the extractor hood filter occasionally. How often cleaning is necessary depends on how often the extractor hood is used. Do not wait to clean the filter until the performance of the extractor hood has noticeably decreased.

Cleaning the filter:

- Wash the filter with warm water and some washing-up liquid.

11.5 Air conditioning unit

11.5.1 Dometic



Fig. 195 Air conditioning unit (Dometic)

A lint filter and an activated carbon filter are each located in the lower part of the air conditioning system ceiling unit (Fig. 195,2) behind the ventilation grills (Fig. 195,1 and 3). The lint filters must be cleaned at regular intervals and replaced if necessary. The manufacturer recommends replacing the activated carbon filter yearly.

On the left side of the ceiling unit (outside of the vehicle) is located the drainage opening for the condensation. Keep the drain openings free from dirt, leaves or similar to allow the condensation to be drained.

11.5.2 Telair

Every now and then clean the filter and the ventilation grilles on the outside of the housing. How often cleaning is necessary depends on how often the air conditioning unit is used. Do not wait to clean the filter and the ventilation grill until the performance of the air conditioning unit has noticeably decreased.



▷ Only use mild cleaning solutions to clean the filter, never use benzene or solvents.

Cleaning the filter:

- Wash the filter with warm water and some washing-up liquid.
- Allow the filter to dry thoroughly before reassembly.

Cleaning the ventilation grill:

- Use a brush to remove coarse dirt or deposits from the external ventilation grilles. If a cleaning solution is used, ensure that no water ingresses into the inside of the housing.

11.6 Winter care

De-icing salt damages the underbody and the parts open to water spray. We recommend that you wash the vehicle more frequently during wintertime. Mechanical and surface treated parts and the underside are under particular strain, and should therefore be cleaned thoroughly.



▷ If there is any risk of frost, always run heater at a minimum of 15 °C. Switch the circulation fan (if there is one) to automatic. In the case of extreme external temperatures, the furniture flaps and doors should be left slightly open. The inflowing warm air can help prevent the freezing of water pipes, for example, and counteract the formation of condensation in the storage spaces.

▷ If there is any risk of frost, cover the outside surface of the windows with winter insulation mats.

▷ Keep the waste gas vent, skylights with forced ventilation and mushroom-shaped vents free of snow. For a roof vent, use a vent extension which is at least 10 cm (4 inch) long.

11.6.1 Preparations

- Check the vehicle for paint and rust damage. Repair damage as necessary.
- Make certain that water cannot penetrate the automatic floor ventilation system and the heater.
- Use a wax-based rust inhibitor to protect the metal parts of the underbody.
- Use appropriate protection for external painted surfaces.

11.6.2 Winter operation

During winter operation, condensation develops when the vehicle is occupied under low-temperature conditions. To ensure good interior air quality and avoid vehicle damage from condensation, sufficient ventilation is essential.

- Attach vent extension with a length of at least 10 cm.
- When heating the vehicle, the heater should be at the highest setting and roof storage cabinets, curtains and blinds should be opened. This ensures optimal ventilation.
- If the vehicle is equipped with a circulation fan, always switch the fan on when the heater is on. Otherwise, there is a danger of overheating for the heater!
- In the morning, lift up all cushions, air out storage boxes and dry any damp areas.



▷ If condensation has still developed, just wipe it off.

▷ It is only possible to guarantee unrestricted operation during winter in connection with the "winter package" from the original equipment.

11.6.3 At the end of the winter season

- Thoroughly clean the underbody. When this is done, corrosion-inducing anti-freeze agents (salts, alkaline residues) are removed.
- Clean the exterior and use regular car wax to protect metal surfaces.
- Remove vent extension.

11.7 Lay-up

11.7.1 Temporary lay-up



- ▶ If the vehicle has been stationary for a long period (approx. 10 months) have the braking and gas systems checked by an authorised specialist workshop.
- ▶ Take into consideration that water is undrinkable after only a short time.

Before laying up the vehicle, go through the following checklist:

	Activities	Done
Chassis	Lubricate the moving parts of the caravan coupling  ▶ Do not lubricate the friction pads on the stabiliser!	
	Jack up caravan with suitable support so that the wheels do not bear any load, or move caravan every four weeks. This prevents pressure points on the tyres and wheel bearings  ▷ Never use the fitted corner steadies as a car jack but only external support.	
	Protect the tyres from direct exposure to the sun. Danger of formation of cracks!	
	Inflate tyres up to the recommended maximum pressure	
	Always provide for sufficient ventilation in the underbody area  ▷ Humidity or lack of oxygen e.g. by covering with plastic film may cause optical irregularities to the underbody.	
Body	All vents should be sealed with the appropriate caps and all other openings (apart from forced ventilations) should also be sealed. This prevents animals (e.g. mice) from gaining entry	
	Air the interior, all storage compartments accessible from the outside, and the parking space (e.g. garage) every 3 weeks in order to prevent the occurrence of condensation and resulting mould formation	
Interior	Place upholstery in an upright position for ventilation, and cover	
	Clean refrigerator	
	Allow refrigerator and freezer compartment doors to remain slightly open	
	Disconnect the flat screen from the mains and, if necessary, remove it from the vehicle	

	Activities	Done
Gas system	Close regulator tap on the gas bottle	
	Close all gas isolator taps	
	Always remove gas bottles from the gas bottle compartment, even if they are empty	
Electrical system	Spray the contacts on the thirteen-pin connector with contact spray	
Water system	Empty the entire water system. Blow out the residual water from the water pipes (0.5 bar max.). Leave the water taps on in central position. Leave the safety/drainage valve (if there is one) and all drain cocks open. Observe the notes in chapter 10	

11.7.2 Winter lay-up

Additional measures are required if laying up the vehicle over winter:

	Activities	Done
Chassis	Clean body and underbody thoroughly and spray with hot wax or protect with varnish	
	Rectify damage to the paintwork	
Body	Clean vehicle from outside thoroughly	
	Keep the forced ventilation open	
	Clean and grease installed supports	
	Clean and grease all door and flap hinges	
	Brush oil or glycerine on all locking mechanisms	
	Rub all rubber seals with talc	
	Use graphite dust to treat locking cylinders	
Interior	Position de-humidifiers	
	Remove upholstery from the vehicle and store in a dry place	
	Air the interior every 3 weeks	
	Empty all cabinets and storage compartments, open flaps, doors and drawers	
	Thoroughly clean the interior	
	If there is a risk of frost, do not leave the flat screen in the vehicle	
Water system	Clean the water system using a cleaning agent from a specialised store	
Complete vehicle	Clean the awning area and store in a dry place	
	Arrange the tarpaulins in such a way that the ventilation openings are not covered, or use porous tarpaulins	

11.7.3 Starting up the vehicle after a temporary lay-up or after lay-up over winter

Go through the following checklist before start-up:

	Activities	Done
Chassis	Check the tyre pressure on all tyres	
	Check the tyre pressure of the spare wheel	
Body	Check the functioning of the fitted supports	
	Check that the windows and skylights are working properly	
	Check that all the external locks are working, such as the external flaps, the filler neck and the conversion door	
	Remove the cover from the waste gas vent of the heater (if there is one)	
	Remove the winter cover from the refrigerator grills (if there is one)	
Gas system	Put the gas bottles in the gas bottle compartment, tie down and connect to the gas pressure regulator	
Electrical system	Connect to 230 V power supply using the external socket	
	Check that the electrical system are working, e.g. interior light, socket and all installed electrical appliances	
Water system	Disinfect water pipes and water tank	
	Close all drain cocks and water taps	
	Check the water taps, drain cocks and water distributors for leaks	
Appliances	Check the function of the appliances	

Chapter overview

This chapter contains instructions about inspection and maintenance work concerning the vehicle.

The maintenance instructions address the following topics:

- caravan couplings
- hitching device Easy-Pull
- braking system
- doors
- replacing light bulbs
- spare parts

At the end of the chapter you will find important instructions on how to obtain spare parts.

12.1 Inspection work

Like any technical appliance, the vehicle must be inspected at regular intervals.

This inspection work must be carried out by qualified personnel.

Special technical knowledge, which cannot be taught within the framework of this instruction manual, is required for these tasks. Personnel possessing this technical knowledge are available for assistance at all service centres. Their experience and regular technical instruction by the factory as well as equipment and tools guarantee expert and up-to-date inspection of the vehicle.

Have the "First Programmed Inspection" carried out at a service centre 12 months after initial registration.

Further inspections should be carried out once a year.

The service centre in charge will confirm the work performed.



▷ Observe the inspections indicated by the manufacturer and have them carried out at the specified intervals. The value of the vehicle is thus preserved.

▷ The confirmation of the inspection work carried out serves as valid proof in the event of damage and guarantee claims.

12.2 Maintenance work

As with every machine, this vehicle requires maintenance. The extent and frequency of the maintenance work required depend on conditions of operation and use. More difficult operating conditions make it necessary to service the vehicle more often.

Have the appliances serviced at the intervals specified in the corresponding instruction manuals.

12.3 Stabilisers

12.3.1 General

Clean the stabiliser and the coupling head regularly. Use either thinners or white spirit. When lubricating the stabiliser ensure that no lubricant is on the friction pads.

12.3.2 AKS 1300

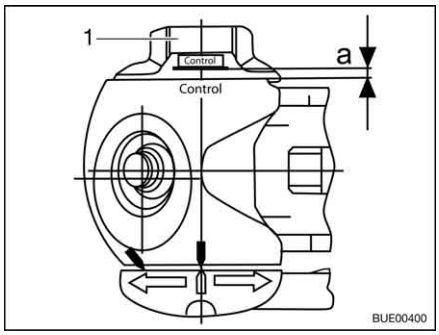

Fig. 196 Friction control

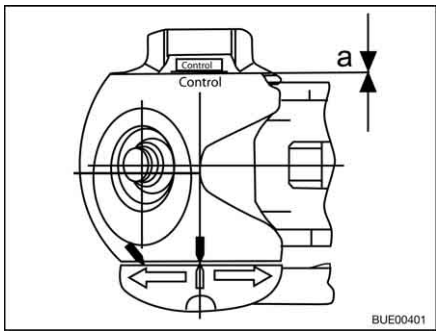

Fig. 197 Friction control

Checking the stabilising device (on the side of the friction pads)

Prerequisite: Connection to AKS 1300, ball diameter 50 mm

- Turn the handwheel (Fig. 196,1), until it can be heard and felt that the torque limiting mechanism grates. Direction of rotation: In a clockwise direction.
- Check distance a:
  - Distance a > 0 (Fig. 196): Wear within the permissible range.
  - Distance a = 0 (Fig. 197): Check and, if necessary, replace the friction pads.

▷ Resetting the friction pads is not required.

12.3.3 AKS 3004

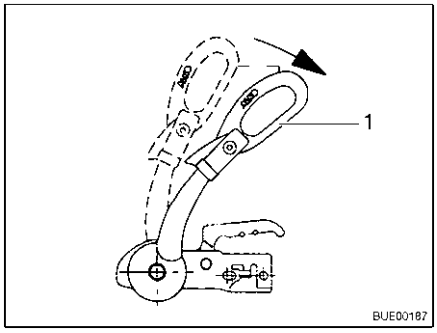

Fig. 198 Stabilising handle

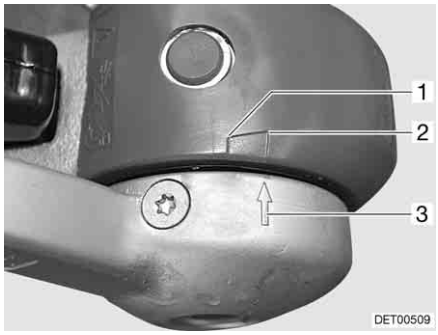

Fig. 199 Friction pads

Checking the stabilising device (on the side of the friction pads)

Prerequisite: Connection to AKS 3004, ball diameter 50 mm

- Open the stabilising handle (Fig. 198,1).
- Close the stabilising handle until a resistance can be felt (the friction pads lie on the ball, they have not been tightened yet).

- If the arrow on the pressure pad (Fig. 199,3) is in front of or on the marked surface (Fig. 199,2), then the friction pads are still in good condition.
- If the arrow on the pressure pad is within the marked surface (Fig. 199,1 to 2), then the friction pads are slightly worn.
- If the arrow on the pressure pad is at the end of the marked surface (Fig. 199,1) or exceeds it, then the friction pads are worn.

▷ Resetting the friction pads is not required.

12.4 Hitching device Easy-Pull

Check the belt of the hitching device on a regular basis. If you discover any cracks, abraded areas or ruptured fibres on the belt, replace it immediately.

12.5 Braking system

Have maintenance work on the braking system carried out by a specialist workshop.

Look up the following table for the inspection deadlines.

First inspection	Braking system	Brake lining
After 1,500 km or after 6 months	Every 10,000 or 15,000 km or every 12 months	Every 5,000 km or every 12 months

12.6 Doors

To maintain gliding capability between springs and hinges, grease the conversion door hinges occasionally.

▷ We recommend either Molykote PG 65 or Vaseline as lubricants.

12.7 Replacing bulbs, external

- ▶ Bulbs and light fittings can be extremely hot. Therefore, allow lights to cool down before changing bulbs.
- ▶ Store bulbs in a safe place inaccessible to children.
- ▶ Do not use any bulb that has been dropped or which shows scratches in its glass. The bulb might burst.

▷ A new bulb should not be touched with the fingers. Use a cloth when installing the new bulb.

▷ Use only bulbs of the same type and with the correct wattage (see table "Types of bulbs for exterior lighting").

▷ If LEDs in lights are defect, contact an authorised dealer or service centre.

Types of bulbs

Different types of bulbs are used in the vehicle. Below, we have described how to change the different types of bulbs.

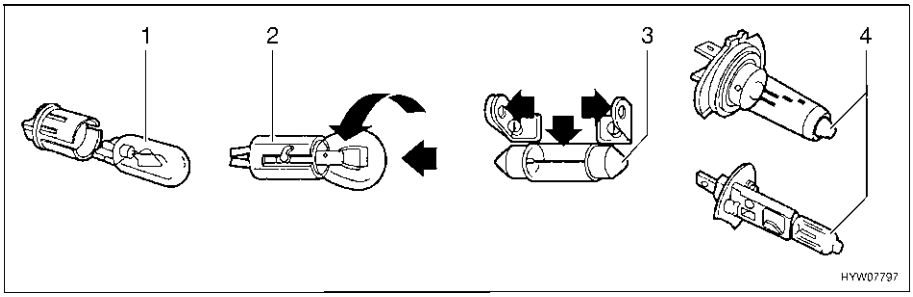

Fig. 200 Types of bulbs

Pos. in Fig. 200	Fixture type/bulb type	Changing
1	Plug-in fixture	To remove, pull out the bulb
		To mount, push the bulb into the socket with gentle pressure
2	Bayonet socket	To remove, press the bulb down and turn in an anticlockwise direction
		To insert, place the bulb in the socket and turn in a clockwise direction
3	Cylindrical bulbs	To remove and to insert, carefully bend the contacts of the lamp holder outwards
4	Halogen bulb	To remove, release retaining springs
		After inserting, hook the retaining springs again

12.7.1 Front lights

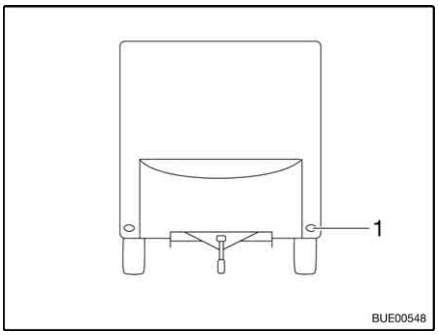

1 Front light

Fig. 201 Front lights

The front lights (Fig. 201,1) have LEDs. To change the LEDs, contact an authorised dealer or a service centre.

12.7.2 Rear lights

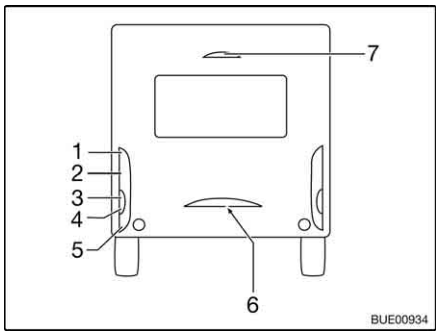

1 Rear light
2 Brake light
3 Direction indicator
4 Reverse light (Averso)
5 Fog tail light
6 Licence plate light
7 Brake light

Fig. 202 Rear lights

- Undo five housing screws.
- Remove housing.
- Remove bulb.
- Put in a new bulb.
- Reassemble the lamp in the reverse order.

▷ Only replace the third brake light (Fig. 202,7) entirely.

12.7.3 Side lights

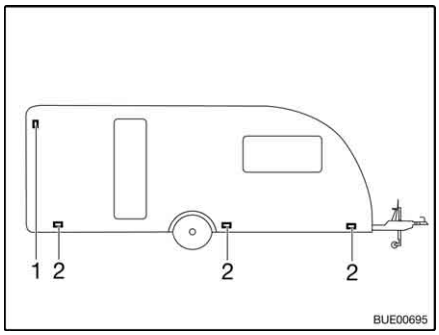

1 Side marker light
2 Marker light

Fig. 203 Side lights

Marker lights The marker lights (Fig. 203,2) have LEDs. To change the LEDs, contact an authorised dealer or a service centre.

Side marker light The side marker light (Fig. 203,1) is fixed at the top of the side wall area.

- Remove housing.
- Remove bulb.
- Put in a new bulb.
- Reassemble the lamp in the reverse order.

12.7.4 Types of bulbs for exterior lighting

	Item no.	Exterior lighting	Type of bulb
Front	1	Front light	LED
Rear	1	Rear light	Ba15s 12 V 5 W
	2	Brake light	Ba15s 12 V 21 W
	3	Direction indicator	Ba15s 12 V 21 W orange
	4	Reverse light	Ba15s 12 V 21 W
	5	Fog tail light	Ba15s 12 V 21 W
	6	Licence plate light	Soffitte 12 V 5 W
	7	Third brake light	T5 12 V 2.3 W
Side	1	Side marker light	Ba15s 12 V 5 W
	2	Marker light	LED

12.8 Replacing bulbs, internal

- ▶ Bulbs and light fittings can be extremely hot. Therefore, allow lights to cool down before changing bulbs.
- ▶ Store bulbs in a safe place inaccessible to children.
- ▶ Do not use any bulb that has been dropped or which shows scratches in its glass. The bulb might burst.
- ▶ Lights can get very hot. When the light is switched on, there must always be a safety distance of 30 cm between light and flammable objects. Fire hazard!

- ▷ A new bulb should not be touched with the fingers. Use a cloth when installing the new bulb.
- ▷ Only use bulbs of the same type and with the correct wattage.
- ▷ If LEDs in lights are defect, contact an authorised dealer or service centre.

12.8.1 Ceiling lamp (cover with clips)



Fig. 204 Ceiling lamp

Bulb 220 V/100 W/E 27

Changing bulbs:

- Carefully release the retaining clips (Fig. 204,1) on the ceiling lamp and take off the glass cover (Fig. 204,2).
- Remove the bulb from the holder.
- Insert the new bulb and turn it in a clockwise direction until you feel a slight resistance.
- Re-fasten the glass cover with the retaining clips.

12.8.2 Recessed halogen light

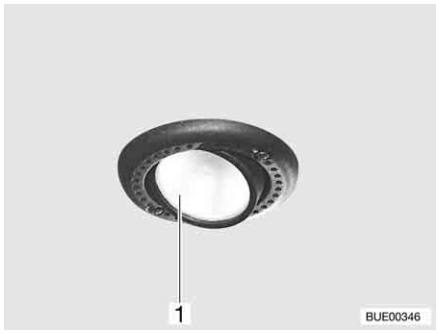

Fig. 205 Recessed halogen light

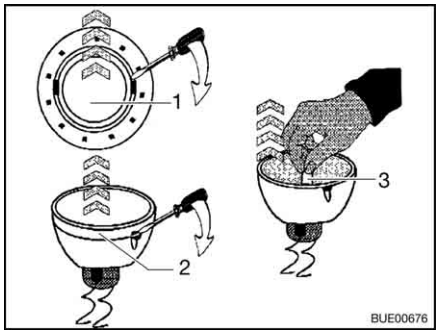

Fig. 206 Changing the halogen bulb

Halogen bulb 12 V/10 W

The recessed halogen light (Fig. 205,1) is installed flush with the panel.

Changing bulbs:

- Use a screwdriver to remove the inner cover ring (Fig. 206,1) from the housing.
- Use a screwdriver to remove the cover ring with the glass (Fig. 206,2) from the lower section of the recessed halogen light.
- Remove halogen bulb (Fig. 206,3).
- Put in a new halogen bulb.
- Reassemble the lamp in the reverse order.

12.8.3 Recessed halogen light (flat)

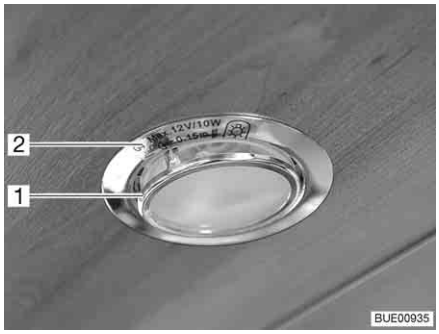

Fig. 207 Recessed halogen light (flat)

Halogen bulb 12 V/10 W

The recessed halogen light (Fig. 207,2) is installed flush with the panel.

Changing bulbs:

- Use a suitable tool (e.g. a screwdriver) to lever out the internal cover ring with glass disk (Fig. 207,1) from the housing.
- Remove halogen bulb.

- Put in a new halogen bulb.
- Reassemble the lamp in the reverse order.

12.8.4 Recessed halogen light (swivelling)



Fig. 208 Recessed halogen light (swivelling)

Halogen bulb 12 V/10 W

The recessed halogen light (Fig. 208,1) is installed flush with the ceiling lamp.

Changing bulbs:

- Turn and remove the inner ring (Fig. 208,2).
- Remove halogen bulb (Fig. 208,3).
- Put in a new halogen bulb.
- Reassemble the lamp in the reverse order.

12.8.5 Halogen spotlight (swivelling)



Fig. 209 Halogen spotlight (swivelling)

Halogen bulb 12 V/10 W

Changing bulbs:

- Turn outer ring (Fig. 209,2) in an anticlockwise direction until it separates from the housing.
- Remove retaining ring (Fig. 209,1).
- Remove halogen bulb.
- Put in a new halogen bulb.
- Reassemble the lamp in the reverse order.

12.8.6 Halogen spotlight (movable)

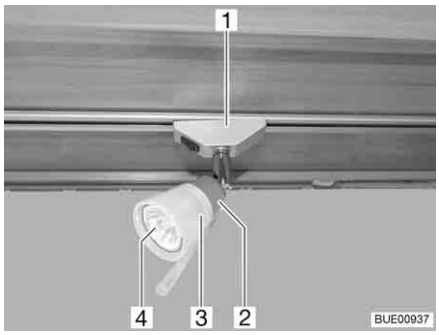

Fig. 210 Halogen spotlight (movable)

Halogen bulb 12 V/10 W

Changing bulbs:

- Turn the halogen spotlight (Fig. 210,1) by 90° and remove from rail.
- Turn the lamp shade (Fig. 210,3) in an anticlockwise direction.
- Withdraw lamp shade complete with halogen bulb (Fig. 210,4) carefully from the holder (Fig. 210,2).
- Remove halogen bulb.
- Screw lamp shade onto holder.
- Insert new halogen spot light into the lamp shade and press into holder.
- Insert halogen lamp into the rail.

12.8.7 Halogen spotlight (gooseneck)



Fig. 211 Halogen spotlight (gooseneck)

Halogen bulb 12 V/10 W

Changing bulbs:

- Pull the halogen bulb (Fig. 211,1) out of the fitting.
- Put in a new halogen bulb.

12.8.8 Cooker lamp

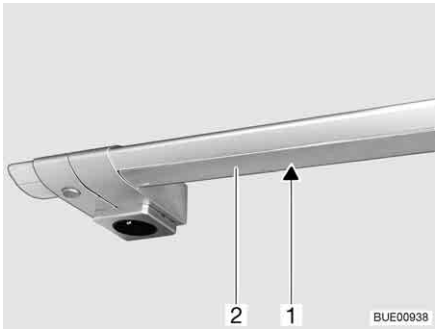

Fig. 212 Cooker lamp

Halogen bulb 12 V/5 W

Changing bulbs:

- Squeeze cover (Fig. 212,2) lightly with both hands and pull downwards. Always start pulling at the very left or right end.
- Remove halogen bulb (Fig. 212,1).
- Put in a new halogen bulb.
- Reassemble the lamp in the reverse order.

12.8.9 Cooker lamp (fixed)

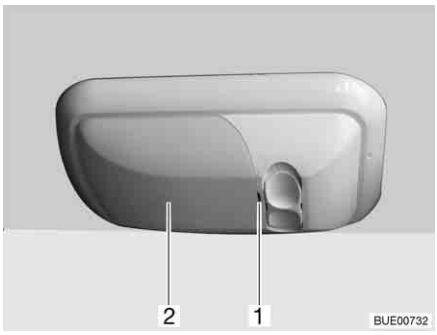

Fig. 213 Cooker lamp

Halogen bulb 12 V/21 CP

Changing bulbs:

- Use a suitable tool (e.g. a screwdriver) to carefully lever out the cover (Fig. 213,2) at the notch (Fig. 213,1) and remove it.
- Remove halogen bulb.
- Put in a new halogen bulb.
- Reassemble the lamp in the reverse order.

12.8.10 Light rope

▷ Each light rope in the vehicle is a certain length. Only replace light ropes with light ropes of the same length.

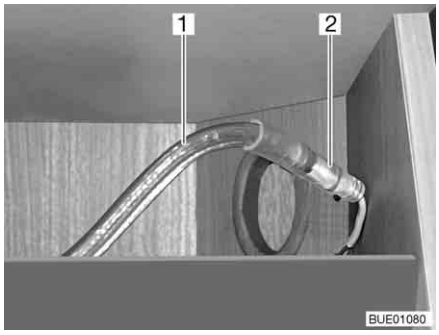

1 Light rope
2 Connector

Fig. 214 Light rope connection

LED 12 V/0.63 W

Changing rope:

- Release the light rope (Fig. 214,1) from the fittings.
- Separate the connection (Fig. 214,2) at the light rope.
- Remove the light rope.
- Connect the new light rope.
- Push the light rope back into the fixtures.

12.9 Spare parts

- ▶ Every alteration of the original condition of the vehicle can alter road behaviour and jeopardize road safety.
- ▶ The special equipment and original spare parts recommended by us have been specially developed and supplied for your vehicle. These products are available at the authorised dealer or service centre. The authorised dealer or service centre is informed about admissible technical details and carries out the required work correctly.
- ▶ The use of accessories, parts and fittings not supplied by us may cause damage to the vehicle and jeopardize road safety. Even if an expert's report, a general type approval or a design certification exists, there is no guarantee for the proper quality of the product.
- ▶ No liability can be assumed for damage caused by products which have not been released by us. This also applies to impermissible alterations to the vehicle.

For safety reasons, spare parts for pieces of equipment must correspond with manufacturer's instructions and be permitted by the manufacturer as a spare part. These spare parts may only be fitted by the manufacturer or an authorised specialist workshop. The authorised dealers and service centres are available for any spare parts requirement.

Here are some suggestions of important spare parts:

- Fuses
- Bulbs
- Water pump (submerged pump)

When ordering spare parts please indicate the chassis number and the vehicle type to the dealer.

The vehicle described in this instruction manual is built and equipped to factory standards. Special equipment is offered depending on its purpose or use. When fitting special equipment check if such equipment has to be entered in the vehicle documents. Observe the max. permissible gross weight. The authorised dealer or service centre will be happy to advise you.

12.10 Vehicle identification plate

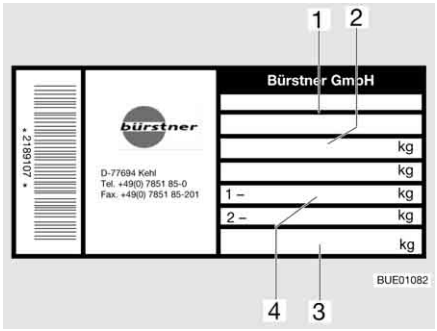

1 Chassis number
2 Maximum permissible gross weight
3 Permissible drawbar nose weight
4 Permissible axle load

Fig. 215 Vehicle identification plate

The vehicle identification plate (Fig. 215) with the chassis number is mounted on the front right side, in the gas bottle compartment.

Do not remove the vehicle identification plate. The vehicle identification plate:

- Identifies the vehicle
- Helps with the procurement of spare parts
- Together with the vehicle documents identifies the vehicle owner

▷ Always include the **chassis number** with all inquiries for the customer service office.

12.11 Warning and information stickers

There are warning and information stickers on and inside the vehicle. Warning and information stickers are for the sake of safety and must not be removed.

▷ Replacement stickers can be obtained from an authorised dealer or a service centre.

Chapter overview

This chapter contains instructions regarding the tyres of the vehicle.

The instructions address the following topics:

- tyre selection
- handling of tyres
- changing wheels
- spare wheel support

At the end of the chapter there is a table you can use to find the correct tyre pressure for your vehicle.

13.1 General



▶ Check tyre pressure before a journey or every 2 weeks. Wrong tyre pressure causes excessive wear and can lead to damage or even to tyre burst. You can lose control of the vehicle.



▷ Only check the tyre pressure on cold tyres.

▷ Tubeless tyres have been installed on the vehicle. Never install tubes in these tyres.

▷ When using alloy wheel rims, snow chains should not be used.



▷ In the case of a puncture, pull over to the side of the road. Make vehicle and caravan safe with a hazard warning triangle. Switch on the warning lights.

▷ Tyres must not be older than 6 years as the material will become brittle over time. The four-digit DOT number on the tyre flank indicates the date of manufacture. The first two digits designate the week, the last two digits the year of manufacture.

Example: (1509) Week 15, year of manufacture 2009.

Observe:

- Check the tyres regularly (every 2 weeks) for equal tread wear, tread depth and external damage.
- Replace tyres at the latest, when the minimum depth of tread stipulated by law is reached.
- Always use tyres of the same model, same brand and same style (summer and winter tyres).
- Only use tyres approved for the wheel rim type fitted. The permitted rim and tyre sizes are quoted in the vehicle documents and the authorised dealer or service centre will always be glad to give you advice.
- Run-in new tyres for approx. 100 km (60 miles) at low speed since only then do they reach full strength.

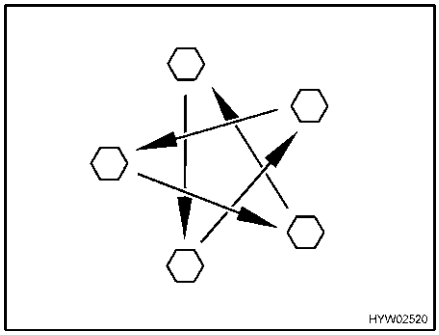

Fig. 216 Tighten the wheel nuts or wheel bolts cross-wise

- Check regularly that the wheel nuts or wheel bolts are firmly seated. Re-tighten the wheel nuts or wheel bolts of a changed wheel cross-wise (Fig. 216) after 50 km (30 miles).
  See section 13.5.2 for tightening torque.
- When using new or newly painted rims, re-tighten the wheel nuts or wheel bolts once again after approx. 1,000 to 5,000 km (600 miles to 3,000 miles).
- For lay-ups or long periods of inactivity, keep the tyres and tyre bearings free from pressure points:
  Jack up the vehicle so that the wheels do not bear any load, or move the vehicle every 4 weeks in such a way that the position of the wheels is changed.

13.2 Tyre selection

► A wrong tyre can damage the tyres during the journey and even cause it to burst.

▷ If tyres that are not approved for the vehicle are used, then the type approval for the vehicle and subsequently the insurance coverage can lapse. Your dealer or service centre will be glad to advise you.

The tyre sizes approved for the vehicle are given in the vehicle documents or can be got from the dealers or service centres. Each tyre must fit the vehicle on which it will be driven. This applies to the external dimensions (diameter, width), which are indicated with the standardised size designations. In addition, the tyres must meet the requirements of the vehicle with regard to weight and speed.

Weight refers to the maximum permissible axle load which can be distributed on two tyres. The maximum load-carrying capacity of a tyre is indicated by its load index (= LI, load index code).

The maximum permissible speed for a tyre (with full load-carrying capacity) is indicated by the speed index (= SI). Together, load index and speed index form the operating code of a tyre. This is an official component of the complete, standardised dimensions description which appears on every tyre. The information on the tyres must correspond to the specifications which appear in the vehicle papers.

13.3 Tyre specifications

215/70 R 15C 109/107 Q

Description	Explanation
215	Tyre width in mm
70	Height-to-width proportion in percent
R	Tyre design (R = radial)
15	Rim diameter in inches
C	Commercial (transporter)
109	Load index code for single tyres
107	Load index code for twin tyres
Q	Speed index (Q = 160 km/h)

13.4 Handling of tyres

- Drive over kerbs at an obtuse angle. Otherwise the flanks of the tyres may get pinched. Driving over a kerb at a sharp angle can damage the tyre and result in it getting ruptured.
- Drive over high manhole covers at a slow speed. Otherwise the tyres may get pinched. Driving over a high manhole cover at high speed can damage the tyre and result in it getting ruptured.
- Check the shock absorbers regularly. Driving with poor shock absorbers significantly increases wear.
- Avoid block brakings. Block braking gives the tyres "brake plates" of varying strength. This reduces driving comfort. It might even make the tyres unserviceable.
- Do not clean the tyres with a high-pressure cleaner. The tyres can suffer serious damage within just a few seconds and rupture as a result.

13.5 Changing wheels

13.5.1 General instructions

The spare wheel (special equipment) is located in the gas bottle compartment. To change the wheel, use a commercial scissor-type or hydraulic vehicle jack or the AL-KO vehicle jack (special equipment).



- ▶ The vehicle must be on level, firm ground, secure from slipping.
- ▶ Before jacking up the vehicle firmly apply the handbrake.
- ▶ Prevent the vehicle from rolling away by blocking the opposite wheel with the wheel chocks.
- ▶ Under no circumstances jack the vehicle with the fitted supports.
- ▶ Position the vehicle jack underneath the axle, not under any circumstances on the bodywork.
- ▶ Never overload the vehicle jack. The maximum permissible load is specified on the vehicle jack's identification plate.
- ▶ Use the vehicle jack only for lifting the vehicle briefly while changing the tyre.

- ▶ No persons may be in the vehicle while it is is raised.
- ▶ Whilst the vehicle is in a jacked up position, persons must not lie down under it.

- ▷ Do not damage the thread of the thread bolts when changing the wheel.
- ▷ Tighten the wheel nuts or wheel bolts cross-wise (Fig. 216).
- ▷ When changing wheels (e.g. alloy wheel rims or wheels with winter tyres), use the correct wheel bolts of the correct length and shape. The firm seating of the wheels and the function of the braking system depend on this.
- ▷ Wheel rims and tyres not permitted for use with the vehicle can jeopardize road safety.

- ▷ Protect the vehicle according to the national regulations, e.g. with a hazard warning triangle.
- ▷ Before changing the wheel, check the wheel rim and tyre size, the max. tyre load and the speed index on the tyres. Only use the wheel rim and tyre sizes stated in the vehicle documents.
- ▷ When alloy wheel rims are mounted, the wheel nuts or wheel bolts for the spare wheel (steel wheel rim) are located in the drawer in the kitchen unit.

13.5.2 Tightening torque

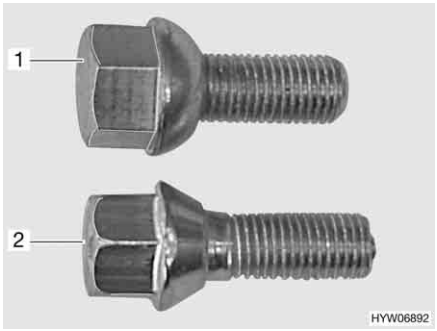

1 Wheel bolt steel wheel rim
2 Wheel bolt alloy wheel rim

Fig. 217 Wheel bolts

Wheel rim	Tightening torque
Steel wheel rim	90 Nm (67 ft/lbs)
Alloy wheel rim	120 Nm (89 ft/lbs)

13.5.3 Changing a wheel

- ▶ The footplate of the vehicle jack must be levelly positioned on the ground.
- ▶ Do not tilt the vehicle jack.
- ▶ Always insert the insertion profile of the AL-KO vehicle jack (special equipment) into the retention pouch as far as possible.
- ▶ If alloy wheel rims are mounted and a steel spare wheel is mounted after a puncture: Do not drive any further than necessary (car dealer, car workshop, tyre dealer). Only drive at a suitable speed. The different wheels affect driving handling.

- ▷ A special vehicle jack from AL-KO with holder pockets is available as special equipment. These holder pockets are mounted on to the frame.
- ▷ The AL-KO jack has a bearing capacity of 800 kg.
- ▷ You should have a useable spare wheel available at all times. For this reason the wheel you have replaced should be repaired immediately.
- ▷ Take note of the general instructions in this chapter.



Fig. 218 Securing support wheel



Fig. 219 Securing vehicle

Preparing the connected caravan:

- ■ Loosen the stabilising device in caravan couplings with stabilising devices. Otherwise the friction pads will be highly loaded.
- ■ Pull the handbrake of the towing vehicle and go to first gear or reverse gear.

Preparing the disconnected caravan:

- ■ Park the vehicle on as even and stable a surface as possible.
- ■ Apply the handbrake.
- ■ Place the support wheel diagonal to the direction of travel and secure with suitable tools (Fig. 218).

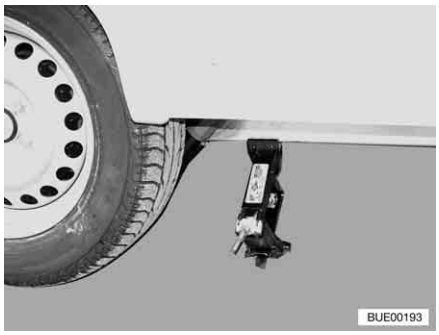

Fig. 220 Commercial vehicle jack

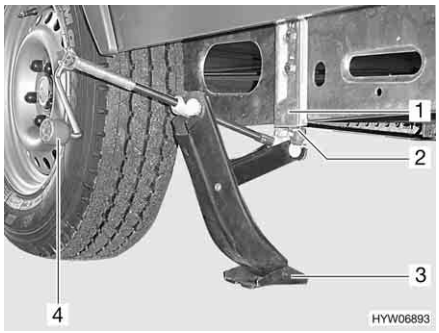

Fig. 221 AL-KO vehicle jack

Changing the wheel:

- ■ Place chocks or other appropriate objects beneath the opposite wheel of the vehicle to secure it (Fig. 219).
- ■ Remove the spare wheel from the spare wheel support.
- ■ If the ground is soft, place a stable support such as a wooden board beneath the vehicle jack.
- ■ Commercial vehicle jack:
  Position the commercial scissor-type jack (Fig. 220) or hydraulic vehicle jack on the frame or on the axle.
- ■ AL-KO vehicle jack:
  Insert the insertion profile (Fig. 221,2) of the AL-KO vehicle jack into the retention pouch (Fig. 221,1) as far as possible.

- AL-KO vehicle jack:
  Hold on to the AL-KO vehicle jack with one hand and with the other turn the hand crank (Fig. 221,4) in a clockwise direction until the footplate (Fig. 221,3) is touching the ground and is in a level position.
- Turn the wheel bolts several times to loosen them, but do not remove them!
- Lift the vehicle until the wheel has been lifted 2 to 3 cm above the ground.
- Remove the wheel bolts and take off the wheel.
- Place the spare wheel on the wheel hub and adjust.
- Screw in the wheel bolts and slightly tighten them cross-wise.
- Crank down the vehicle jack and remove it.
- Using the wheelbrace, tighten the wheel bolts evenly. The target value of the tightening torque of the wheel bolts is 90 Nm for steel wheel rims or 120 Nm for alloy wheel rims.

13.5.4 Changing a wheel at alloy wheel rims



- ▶ The resting surfaces of the wheels on the break drums must be clean and free of burrs.
- ▶ Only use fastening parts provided for to loosen the wheels lightly and ensure that they rest correctly and move freely, subsequently tighten the wheel bolts cross-wise with a suitable wrench.
- ▶ Many axles do not have a centring aid, flange or bolts. It must be ensured that the wheel bolts are equally centered above the bolt circle (no jamming).
- ▶ Alloy wheel rims and steel wheel rims require different wheel bolts. When alloy wheel rims are mounted, the spare wheel (steel wheel rim) is accompanied by suitable wheel bolts.

13.6 Spare wheel support in gas bottle compartment

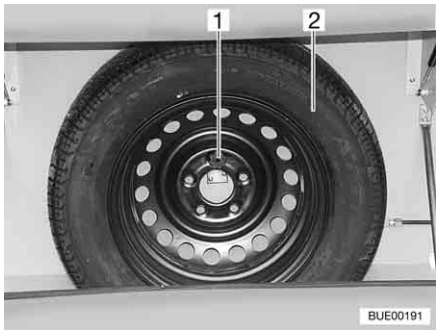

Fig. 222 Spare wheel support

The spare wheel support is fitted in the gas bottle compartment. The spare wheel (Fig. 222,2) is available for a surcharge.

Removing the spare wheel:

- Undo bolt (Fig. 222,1).
- Remove the spare wheel (Fig. 222,2).

13.7 Tyre pressure

- ▶ Tyres overheat if the tyre pressure is too low. This can cause serious tyre damage.
- ▶ Check tyre pressure before a journey or every 2 weeks. Wrong tyre pressure causes excessive wear and can lead to damage or even to tyre burst. You can lose control of the vehicle.
- ▶ Use only valves that are approved for the specified tyre pressure.

▷ Only check the tyre pressure on cold tyres.

The payload and the durability of tyres is directly dependent on the tyre pressure. Air is a volatile medium. It is unavoidable that it will escape from tyres.

As a rule of thumb it can be assumed that a filled tyre loses pressure at a rate of 0.1 bar every two months. To prevent the tyres becoming damaged or burst, check the tyre pressure regularly.

The contact surface of the tyre changes, depending on the tyre pressure.

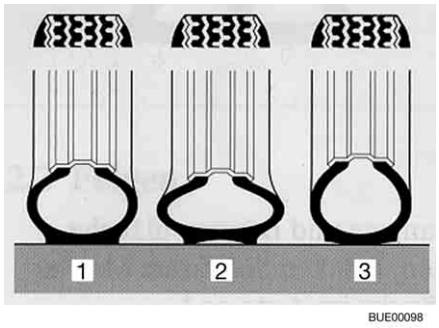

1 Correct tyre pressure
2 Tyre pressure too low
3 Tyre pressure too high

Fig. 223 Contact surface of the tyre

▷ The information on pressure levels is valid for cold tyres and loaded vehicles.

▷ Pressure in hot tyres must be 0.3 bar higher than in cold tyres. Recheck the pressure when the tyres are cold.

▷ Tyre pressures in bar.

▷ The tyre pressure tolerance is +/- 0.05 bar.

Tyres	Maximum permissible gross weight mono axle (kg)	Maximum permissible gross weight tandem axle (kg)	Tyre pressure (bar)
155/80 R 13 LI79	Up to 700		3.00
165/80 R 13 LI83	Up to 700		2.50
	800		2.75
	900		3.00

Tyres	Maximum permissible gross weight mono axle (kg)	Maximum permissible gross weight tandem axle (kg)	Tyre pressure (bar)
185 R 14 C LI102	Up to 1100		3.75
	1200		3.75
	1300		4.00
	1400		4.00
	1500		4.25
	1600	2800	4.50
185/60 R 15 C LI94	Up to 1200	2200	4.00
	1300	2500	4.25
	1350		4.25
185/70 R 13 LI86	Up to 700		2.50
	800		2.70
	900	1800	2.70
	1000	2000	3.00
185/70 R 14 LI88	Up to 900	1800	2.60
	1000	2000	2.80
195 R 14 C LI106	Up to 1100		3.25
	1200		3.25
	1300		3.50
	1400		3.50
	1500		3.75
	1600	2800	4.00
	1700		4.50
	1800	3500	4.50
195/65 R 14 LI89	Up to 1000	2000	3.00
	1100	2200	3.00
195/70 R 14 LI91	Up to 1000	2000	2.50
	1100	2200	2.70
195/70 R 14 XL95	Up to 1100	2000	2.90
	1200	2200	3.10
	1350		3.40
195/70 R 14 XL LI96	Up to 900	1800	2.70
	1000	2000	2.90
	1100	2200	2.90
	1200		3.10
	1300	2500	3.30
	1400	2800	3.40

Premio/Averso - 09/10 - Ausgabe 12/09 - 1865313 - BUE-0048-08EN

Tyres	Maximum permissible gross weight mono axle (kg)	Maximum permissible gross weight tandem axle (kg)	Tyre pressure (bar)
195/70 R 15 C LI104	Up to 1100		3.25
	1200		3.25
	1300		3.50
	1400		3.75
	1500	2800	4.00
	1600		4.25
	1700		4.50
205 R 14 C LI109	Up to 1600		4.00
	1700		4.25
	1800	3500	4.25
	1900		4.50
215/55 R 16 XL LI97	Up to 1100		2.70
	1200		2.70
	1300		3.00
	1400		3.00
215/70 R 15 C LI109	Up to 1100		3.00
	1200		3.25
	1300		3.50
	1400		3.50
	1500		4.00
	1600	2800	4.25
	1700		4.50
	1800	3500	4.50
	1900		4.50

Max. permissible speed = 100 km/h (60 mph).

Please always observe the speed limits in the individual countries (see chapter 17).

The vehicles are constantly brought up to the newest technical standards. It is possible that new tyre sizes are not yet included in this table. If this is the case, the Bürstner dealer will be happy to provide the newest values.

Chapter overview

This chapter contains instructions about possible faults in your vehicle.

The faults are listed with their possible causes and corresponding remedies.

The instructions address the following topics:

- chassis
- braking system
- caravan control system
- electrical system
- gas system
- gas cooker
- gas oven
- microwave oven
- heater
- boiler
- hot water source
- refrigerator
- air conditioning unit
- water supply
- body

The specified faults can be remedied with relative ease and without a great deal of specialised knowledge. In the event that the remedies detailed in this instruction manual should not be successful, an authorised specialist workshop must find and eliminate the cause of the fault.

14.1 Chassis

Fault	Cause	Remedy
Coupling does not lock in place after being placed on top	Ball larger than Ø 50 mm	Remove dirt
		Contact customer service
	The coupling interiors are soiled and no longer work automatically	Clean well and lubricate (not stabiliser)
Caravan cannot be detached	Ball worn	Position the caravan and towing vehicle in the same direction and detach. Immediately replace the worn ball

14.2 Braking system



- ▶ Have defects on the braking system immediately remedied by an authorised specialist workshop.
- ▶ Follow maintenance or manufacturer specifications.

14.3 Caravan control system (ATC)

Fault	Cause	Remedy
Control LED flashes green (possible to continue journey)	ATC active Self test not yet complete	Drive approx. 30 m with the trailor at a minimum 10 km/h. If the control LED continues to flash, contact customer services
Control LED lights up red (possible to continue journey)	ATC not active Fault in system	Separate the electrical connection between the caravan and the towing vehicle for at least 5 seconds Reconnect If the control LED continues to light up red, contact customer services
Control LED flashes red (do not continue journey)	ATC brakes	Separate the electrical connection between the caravan and the towing vehicle for at least 5 seconds Reconnect If the control LED continues to flash red, perform a visual check in accordance with the manufacturer's instruction manual and, if necessary, reset the braking system
Control LED does not illuminate (only possible to continue journey after test)	ATC without power (only possible to continue journey after test)	Connect the electrics between the caravan and the towing vehicle
	LED defect	Connect the electrics between the caravan and the towing vehicle If the control LED still does not illuminate, perform a visual check in accordance with the manufacturer's instruction manual and contact customer service

14.4 Electrical system



▷ See chapter 8 for changing the fuses.

Fault	Cause	Remedy
Road light system does no longer work correctly	Bulb is defective	Unscrew cover of the relevant light, replace bulb. Note volts and watts specifications
	Contacts on the plug and/or in the socket have oxidised and/or are contaminated	Clean contacts and spray with contact spray
	Short circuit caused by water in the plug and/or socket	Open plug and/or socket, dry out, and spray with contact spray
	Cable interruption on the plug and/or socket	Open plug and/or socket, re-connect cable (see connection diagram in chapter 8)
Road light system does not match the towing vehicle light system	Contact connections within the plug have been reversed	Check contact allocation and wiring on the plug/ connector of the caravan
No 230 V power supply despite connection	230 V automatic circuit breaker has triggered	Switch on the 230 V automatic circuit breaker
12 V power supply does not work	230 V automatic circuit breaker is switched off	Switch on the 230 V automatic circuit breaker
	Fuse on the power supply unit is defective	Replace fuse
	Power supply unit is defective	Contact customer service
Interior lighting does no longer work correctly	Bulb is defective	Unscrew cover of the relevant light, replace bulb. Note volts and watts specifications
	Fuse on the power supply unit is defective	Replace fuse
Extractor hood does not work	230 V automatic circuit breaker is switched off	Switch on the 230 V automatic circuit breaker
	Power supply unit is defective	Contact customer service
	Fuse on the power supply unit is defective	Replace fuse
	Extractor hood defective	Contact customer service

14.5 Gas system



- ▶ In case of a defect of the gas system (gas odour, high gas consumption) there is danger of explosion! Close regulator tap on the gas bottle immediately. Open doors and windows and ventilate well.
- ▶ If the gas system is defective: Do not smoke; do not ignite any open flames, and do not operate electric switches (light switches etc.).
- ▶ Have the defective gas system repaired by an authorised specialist workshop.

Fault	Cause	Remedy
No gas	Gas bottle is empty	Change gas bottle
	Gas isolator tap closed	Open the gas isolator tap
	Regulator tap on the gas bottle is closed	Open regulator tap on the gas bottle
	External temperature is too low (-42 °C for propane gas, 0 °C for butane gas)	Wait for higher external temperatures
	Built-in appliance is defective	Contact customer service

14.6 Cooker

14.6.1 Gas cooker/gas oven

Fault	Cause	Remedy
Ignition fuse does not operate (flame does not burn after the control knobs are released)	Heat-up time is too short	Keep control knob pressed for approx. 15 to 20 seconds after ignition
	Ignition fuse is defective	Contact customer service
Flame extinguishes when being reduced to its minimum setting	Thermocouple sensor is incorrectly set	Correctly reset thermocouple sensor (do not bend). The sensor tip should protrude by 5 mm beyond the burner. The sensor neck should not be more than 3 mm away from the burner ring; if necessary, contact customer service

14.6.2 Microwave oven



▶ Only qualified personnel may repair the microwave oven. Improper repairs can cause major risks to the user.

Fault	Cause	Remedy
Microwave oven does not cut in	Fuse is defective	Replace fuse
	Door of the microwave oven is not properly closed	Remove foreign bodies stuck in the door of the microwave oven and close door properly

14.7 Heater, boiler and hot water source

In the event of a defect contact the nearest customer service workshop of the relevant appliance manufacturer. The list of addresses is enclosed with the accompanying appliance documentation. Only authorised qualified personnel may repair the appliance.

14.7.1 Trumatic S hot-air heater

Fault	Cause	Remedy
For heater with automatic ignition: Heater does not ignite	Battery on the automatic ignition empty	Changing the battery on the automatic ignition

14.7.2 Truma boiler

Fault	Cause	Remedy
Gas operation		
Red indicator lamp "Fault" illuminates	Air in the gas pipe system	Switch off and on again. After two futile ignition attempts, wait for 10 minutes before trying again
	Lack of gas	Open regulator tap and gas isolator tap
		Connect a full gas bottle
	Defect of a safety element	Contact customer service
Green indicator lamp behind knob is not lit	Fuse of the boiler is defective	Replace fuse
	Fuse in the electronic control unit has been triggered	Contact customer service
Red and green indicator lamps are not lit	No power supply	Establish the power supply
	Fuse of the boiler is defective	Replace fuse

Electrical operation

Fault	Cause	Remedy
Boiler is connected to power supply but is not heated	Operating switch is switched off	Switch on the operating switch, the indicator lamp on the switch must light up
	Operating switch defective	Contact customer service
	230 V automatic circuit breaker is switched off	Switch on the 230 V automatic circuit breaker
	230 V power supply disconnected	Connect 230 V power supply
	Overtemperature fuse has triggered	Switch off boiler and switch on after approx. 5 minutes
	Heating coil of the boiler is defective	Contact customer service

14.7.3 Truma hot water source

Fault	Cause	Remedy
The hot water source is connected to power supply but does not heat	Operating switch is switched off	Switch on operating switch; the red indicator lamp must be lit
	Operating switch defective	Contact customer service
	230 V automatic circuit breaker is switched off	Switch on the 230 V automatic circuit breaker
	230 V power supply disconnected	Connect 230 V power supply
	Fuse is defective	Replace fuse
	Heating coil in the hot water source is defective	Contact customer service

14.8 Refrigerator

In the event of a defect contact the nearest customer service workshop of the relevant appliance manufacturer. The list of addresses is enclosed with the accompanying appliance documentation. Only authorised qualified personnel may repair the appliance.

Fault	Cause	Remedy
Refrigerator does not switch on when operating in 230 V mode	No 230 V power supply	Connect 230 V power supply
	230 V automatic circuit breaker has triggered	Switch on the 230 V automatic circuit breaker
	230 V operating voltage too low	Have the 230 V power supply checked by an authorised specialist workshop

Fault	Cause	Remedy
Refrigerator does not switch on when operating in 12 V mode	Contacts on the plug and/or in the socket have oxidised and/or are contaminated	Clean contacts and spray with contact spray
	Short circuit caused by water in the plug and/or socket	Open plug and/or socket, dry out, and spray with contact spray
	Cable interruption on the plug and/or socket	Open plug and re-connect cable
	Fuse for refrigerator is defective	Replace fuse
Refrigerator does not switch on when operating in gas mode The "GAS" operating indicator flashes yellow (RM 7651)	Lack of gas	Open regulator tap and gas isolator tap
		Connect a full gas bottle
	Air in the gas pipe	Repeat ignition 3 or 4 times
	Cobwebs or burnt residue in the burning chamber	Remove the ventilation grill on the outside of the vehicle and clean the burning chamber
The desired refrigerating temperature is not achieved	Incorrect setting	Set the temperature with the temperature controller
	Too much fresh food put into it	Set the temperature with the temperature controller

14.9 Air conditioning unit

14.9.1 Dometic

Fault	Cause	Remedy
Air conditioning unit does not start up	No 230 V power supply	Connect the vehicle to the local power supply
	230 V automatic circuit breaker has triggered	Switch on the 230 V automatic circuit breaker
	Remote control batteries empty	Change remote control batteries
Air conditioning unit does not cool	Temperature below 16 °C	–
	Temperature has been set incorrectly	Adjust the temperature
	Thermostat defective	Contact customer service
Air conditioning unit does not warm up	Temperature above 30 °C	–
	Temperature has been set incorrectly	Adjust the temperature
	Thermostat defective	Contact customer service

Fault	Cause	Remedy
Water is entering the vehicle	Drainage holes for condensation are clogged	Clean air conditioning unit
	Seal is defective	Contact customer service
No more air circulation	Air filter clogged	Clean air filter
	Fan wheel defective	Contact customer service

14.9.2 Telair

Fault	Cause	Remedy
Air conditioning unit does not start up	No 230 V power supply	Connect 230 V power supply
	230 V automatic circuit breaker has triggered	Switch on the 230 V automatic circuit breaker
	Remote control batteries empty	Change batteries (2 x AAA)
Air conditioning unit does not cool	Room temperature is lower than the preset temperature	Reset temperature
Air conditioning unit does not heat	Room temperature is higher than the preset temperature	Reset temperature
Insufficient ventilation rating	Ventilation flaps closed	Open at least one ventilation flap
	Filter dirty	Clean the filter
Water is entering the vehicle	Drainage holes for condensation are clogged	Clean air conditioning unit

14.10 Water supply

Fault	Cause	Remedy
Leakage water inside the vehicle	A leak has occurred	Identify leak, re-connect water pipes
No water	Water tank is empty	Replenish drinking water
	Water drain cock open	Close water drain cock
	Fuse of the water pump is defective	Replace fuse
	Water pump defective	Exchange water pump (have it exchanged)
	Water pipe snapped off	Straighten water pipe or replace
	Power pack or power supply unit defect	Contact customer service
Toilet has no flush water	Water tank is empty	Replenish drinking water
	Fuse for toilet is defective	Replace fuse
Water drains from the shower tray slowly or does not drain at all	The vehicle is not in a horizontal position	Position the vehicle horizontally

Fault	Cause	Remedy
Drain on the one-hand lever mixer is clogged	Perlator calcified	Unclip the perlator, decalcify in vinegar water (only for products made from metal)
Milkiness of the water	Tank filled with dirty water	Clean water tank mechanically and chemically; then disinfect and rinse copiously with drinking water
	Residues in the water tank or water system	Clean water system mechanically and chemically; then disinfect and rinse copiously with drinking water
Any change in the taste or odour of the water	Tank filled with dirty water	Clean water system mechanically and chemically; then disinfect and rinse copiously with drinking water
	Fuel filled into the water tank by mistake	Clean water system mechanically and chemically; then disinfect and rinse copiously with drinking water. If not successful: Contact a specialist workshop
	Microbiological deposits in the water system	Clean water system mechanically and chemically; then disinfect and rinse copiously with drinking water
Deposits in the water tank and/or water-carrying components	Water excessively long in the water tank and in water-carrying components	Clean water system mechanically and chemically; then disinfect and rinse copiously with drinking water

14.11 Body

Fault	Cause	Remedy
Flap hinges/door hinges are difficult to operate	Flap/door hinges are not sufficiently lubricated	Lubricate flap hinges/ door hinges with acid-free and resin-free grease
Hinges/joints in the bathroom unit/toilet compartment are difficult to operate/make a grating noise	Hinges/joints are not sufficiently lubricated	Lubricate hinges/joints with solvent-free and acid-free grease ▷ Spray cans often contain solvents
Storage compartment hinges are difficult to operate/make a grating noise	Storage compartment hinges are not sufficiently lubricated	Lubricate storage compartment hinges with acid-free and resin-free grease

▷ The authorised dealers and service centres are available for any spare parts requirement.

15.1 Weight details for special equipment



- The use of accessories, parts and fittings not supplied by us may cause damage to the vehicle and jeopardize road safety. Even if an expert's report, a general type approval or a design certification exists, there is no guarantee for the proper quality of the product.
- Every alteration of the original condition of the vehicle can alter road behaviour and jeopardize road safety.
- No liability can be assumed for damage caused by products which have not been released by us. This also applies to impermissible alterations to the vehicle.

Weight details for Bürstner special equipment are listed in the table below. If these objects are either carried in or on the vehicle and are not part of the standard equipment, they must be taken into consideration when calculating the payload.

All weight details are approximate.

Observe the max. permissible gross weight.

Item designation	Surplus weight (kg)
Waste water pipes, insulated and heated	2
Waste water tank 22 litres	3
Airmix comfort package	1
AL-KO Trailer-Control	5
Alloy wheel rims	-7
Hitching device Easy-Pull	1
External shower	1
External socket	1
Oven	13
Direct water supply	3
Skylight Heki 2	6
Drawbar head theft protection	2
Extractor hood	1
Shower curtain	2
Conversion door, single-section	8
Spare wheel 185/70 R 13	18
Spare wheel 185 R 14 C	18
Spare wheel 195/70 R 14 RF	20
External gas connection	1
Drawbar bike rack for 2 bicycles	4
Rear bike rack for 2 bicycles	10
Floor warming unit	2
Gas bottle (11 kg) made of aluminium	12
Gas bottle switching facility, automatic	5
Gas alarm system	5

Item designation	Surplus weight (kg)
Weight increase	5
Smooth plate	30
Holder for flat screen	1
Heater S 5002	8
Insect screen, door (half-height)	1
Insect screen, door (full height)	5
Children's bunk bed with 3 levels	20
Air conditioning unit (Dometic)	40
Air conditioning unit (Telair)	34
150-litre refrigerator	14
LCD television	9
Media column	4
Microwave oven	14
Minisafe	5
Neck rests (round seating group)	3
Satellite system receiver	7
Roll-up grille	2
Satellite unit (automatic)	10
Satellite unit (semi-automatic)	6
Service flap (installation dependent on model)	2
Stabilising supports, complete set	4
Bedspread	1
Pocket spring mattress	18
TecTower	16
Truma hot water source	2
Truma Ultraheat	6
Truma circulation system	12
Awning light	1
Vehicle jack (AL-KO)	5
Water tank, mobile, 22 litres, with external flap	3
Water tank, 40 litres, permanently installed	2
Truma winter package	6

16.1 Table of linear measures

	Type	Body length, exterior	Body length, interior	Body width, exterior	Total length	Overall height	Awning dimensions
Premio	400 TS	4730	4190	2100	6150	2540	8650
	435 TS	5040	4500	2100	6530	2540	8980
	450 TS	5400	4790	2300	6750	2540	9300
	480 TK	5580	5040	2300	7020	2540	9580
	485 TK	5580	5040	2300	7020	2540	9580
	490 TL	5680	5140	2300	7100	2540	9690
Averso	390 TS	4550	3950	2300	5950	2540	8500
	420 TS	5100	4500	2300	6500	2540	9020
	450 TS	5200	4600	2300	6600	2540	9200
	460 TL	5510	4910	2300	6880	2540	9460
	460 TS	5400	4800	2300	6800	2540	9350
	465 TS	5860	5250	2300	7240	2540	9800
	480 TK	5700	5100	2300	7070	2540	9650
	495 TK	5910	5310	2300	7310	2540	9850
	500 TK	5900	5300	2300	7310	2540	9850
	500 TL	5900	5300	2300	7310	2540	9850
	550 TK	6100	5500	2500	7500	2540	10050

16.2 Power supply

Input voltage	Primary	230 V AC, 47-63 Hz
Output voltage	Secondary	12 V DC, max. 24 A
Fuse	Protection class I	

Chapter overview

This chapter contains helpful tips for the journey.

The instructions address the following topics:

- road assistance in European countries
- traffic rules in European countries
- gas supply in European countries
- toll regulations in European countries
- safe ways to spend the night during travel
- camping in winter

At the end of the chapter there is a checklist containing the most important equipment for the journey.

17.1 Traffic rules in foreign countries



▷ The vehicle driver is required to inform himself as to the traffic rules of the countries in which he plans to travel before beginning the trip. Contact your automobile club or embassy for further information.

▷ In some European countries, warning vests must be worn when exiting the vehicle outside of towns in the case of vehicle failures or accidents.

Information about traffic regulations is especially important as state law applies in case of damage. For your own safety, always observe the following rules when travelling abroad:

- Take the green insurance card with you.
- Always register accidents with the police.
- Never sign documents that you have not read and understood completely.

17.2 Help on Europe's roads

Country	✚ Emergency services ✶ Police	☎ Breakdown service
Belgium	✚ 112 ✶ 112	☎ TCB Brussels 0 70 34 47 77
Bulgaria	✚ 150 ✶ 166	☎ UAB (02) 9 80 33 08/146 [1]
Denmark	✚ 112 free of charge ✶ 112 free of charge	☎ Falck 79 42 42 42
Germany	✚ 112 ✶ 110	☎ ADAC 22 22 22 [1]
Estonia	✚ 112 ✶ 110/112 [1]	☎ EESTI (0) 6 97 91 88/18 88 [1]
Finland	✚ 112 ✶ 112	☎ Helsinki (09) 77 47 64 00
France	✚ 15/112 [1] ✶ 17/112 [1]	☎ Lyon (08) 25 80 08 22 AIT-Assistance 0800 08 92 22

Country	✚ Emergency services ✶ Police	☎ Breakdown service
Greece	✚ 112 ✶ 171/112 [1)]	☎ ELPA 104 00
Great Britain	✚ 112 ✶ 112	☎ AA (08 00) 0 28 90 18/ (08 00) 82 82 82 [1)]
Ireland	✚ 999/112 [1)] ✶ 999/112 [1)]	☎ AA Dublin 18 00 66 77 88
Iceland	✚ 112 ✶ 112	☎ F.I.B 5 11 21 12
Italy	✚ 118/112 [1)] ✶ 112	☎ ACI 803 116/8 00 11 68 00 [1)]
Croatia	✚ 94/112 [1)] ✶ 92/112 [1)]	☎ HAK 9 87/ 0 19 87 [1)]
Latvia	✚ 03/112 [1)] ✶ 02/112 [1)]	☎ LAMB 8 00 00 00
Lithuania	✚ 03/112 [1)] ✶ 02/112 [1)]	☎ LAS 8 80 00 00 00/18 88 [1)]
Luxembourg	✚ 112 ✶ 113/112 [1)]	☎ ACL 2 60 00
Macedonia	✚ 194 ✶ 192	☎ AMSM 196
Montenegro	✚ 94 ✶ 92	☎ AMSCG 9807
Netherlands	✚ 112 ✶ 112	☎ ANWB 08 82 69 28 88
Norway	✚ 113 ✶ 112	☎ NAF 81 00 05 05
Austria	✚ 144/112 [1)] ✶ 133/112 [1)]	☎ ÖAMTC 120
Poland	✚ 999/112 [1)] ✶ 997/112 [1)]	☎ PZM 022 5 32 84 33
Portugal	✚ 112 ✶ 112	☎ ACP Lissab. (21) 9 42 91 03 ACP Porto (22) 8 34 00 01
Romania	✚ 961/112 [1)] ✶ 955/112 [1)]	☎ ACR (021) 2 22 22 22/ (021) 2 22 15 53 [1)]
Russia	✚ 03 ✶ 02	☎ RAS (4 95) 7 47 66 66
Sweden	✚ 112 ✶ 112	☎ M 0 20 91 29 12

Premio/Averso - 09/10 - Ausgabe 12/09 - 1865313 - BUE-0048-08EN

Country	✚ Emergency services ✶ Police	☎ Breakdown service
Switzerland	✚ 144 ✶ 117/112 [1)]	☎ TCS 1 40/03 18 50 53 11 [1)]
Serbia	✚ 94 ✶ 92	☎ AMSS (011) 19800
Slovakia	✚ 155/112 [1)] ✶ 158/112 [1)]	☎ SATC 1 81 24
Slovenia	✚ 112 ✶ 113	☎ AMZS (1) 9 87/ (003861) 5 30 53 53 [1)]
Spain	✚ 061 ✶ 112	☎ RACE 9 15 93 33 33
Czech Republic	✚ 155/112 [1)] ✶ 158/112 [1)]	☎ UAMK CR 12 30
Turkey	✚ 112 ✶ 155/112 [1)]	☎ TTOK (02 12) 2 82 81 40
Ukraine	✚ 03 ✶ 02	☎ 112 UA (8-032) 2 97 81 12
Hungary	✚ 104/112 [1)] ✶ 107/112 [1)]	☎ MAK 1 88/(0036-1) 13 45 17 44 [1)]
Cyprus	✚ 112 ✶ 112	☎ AA 02 22 31 31 31

[1)] In the mobile communication network

Date 03/2007
Specifications without guarantee

17.3 Speed limits



- ▶ Please always observe the speed limits in the individual countries.
- ▶ The caravan constructions were designed for a maximum permissible speed of 100 km/h (60 mph). Therefore never drive faster than 100 km/h (60 mph).

For information, the speed limits of the countries visited most (all specifications in km/h):

Country	In built-up areas	Outside built-up areas	Motorway
Belgium	50	90/120 [1) 2)]	120 [2)]
Bulgaria	50	70	100
Denmark	50	70	80
Germany	50	80	80/100 [3) 4)]
Estonia	50	70	70

Country	In built-up areas	Outside built-up areas	Motorway
Finland	50	80	80
France	50	90 [5)]/110 [1) 2) 6)]	130 [7) 2)]
Greece	50	80	80
Great Britain	48	80/96 [1)]	96 [3)]
Ireland	50	80/100 [1)]	120 [2)]
Iceland	50	80	–
Italy	50	70	80
Croatia	50	80	80
Latvia	50	80	80
Lithuania	50	70	70
Luxembourg	50	75	90
Macedonia	50/60	80	80
Montenegro	50	80	80
Netherlands	50	80	80
Norway	50	60 [8)]/80	60 [8)]/80
Austria	50	100 [9)]	100 [9)]
Poland	50	70/80 [1)]	80
Portugal	50	70/80 [10)]	100
Romania	50	70/80 [1)]	90
Russia	60	70	90 [11)]
Sweden	50	80 [12)]	80 [12)]
Switzerland	50	80	80
Serbia	60	80	80
Slovakia	60	80	80
Slovenia	50	80	80
Spain	50	70/80 [1)]	80
Czech Republic	50	80	80
Turkey	50	70	80
Ukraine	60	80 [11)]	80 [11)]
Hungary	50	70	80
Cyprus	50	80	100

1) On expressways, on roads with more than one lane in each direction and on roads resembling highways

2) In the event of accidents involving speeds in excess of 100 km/h insurance payments may be reduced as caravans are only type approved for speeds up to 100 km/h

3) Towing vehicle/trailer combinations must not use the far left-hand lane (far right-hand lane in GB) on three-lane motorways

Premio/Averso - 09/10 - Ausgabe 12/09 - 1865313 - BUE-0048-08EN

4) Only with the approval of the road traffic authority for the relevant towing vehicle/ trailer combination.
5) In wet conditions 80 km/h
6) In wet conditions 100 km/h
7) In wet conditions 110 km/h
8) Trailers with no brakes and a current gross weight exceeding 300 kg
9) With trailer of over 750 kg (max. perm. gross weight of 3.5 t), the following applies: On highways 80 km/h, on motorways 100 km/h. For towing vehicles over 3.5 t perm. gross weight, 70 km/h out of town, 80 km/h on motorways
10) According to the traffic signs
11) Drivers who have had their driver's licence for less than two years must not drive faster than 70 km/h
12) Trailer with no brakes whose maximum permissible gross weight is two times the unladen weight of the towing vehicle: 40 km/h

Date 06/2008
Source: ADAC
Specifications without guarantee

17.4 Driving with low beam in European countries

▷ In many European countries, it is compulsory to drive with the vehicle's lights on even during the day. Regulations vary between countries. Motoring organisations or consulates can provide you with the relevant information.

17.5 Sleeping in the vehicle away from camping areas

Country	Sleeping on roads and fields		Sleeping on privately owned lands		Comments
	Yes	No	Yes	No	
Belgium		X	X		On highway rest areas max. 24 hours permitted
Bulgaria		X		X	
Denmark	X		X		On streets and squares only up to 11 hours with a parking disc
Germany	X		X		Staying overnight for one night to restore driving ability is permitted. There may be regional and local limitations
Finland	X			X	Possible with the permission of the land owner
France	X		X		Permission from the local authorities or the owner of the land is required. Parking and staying overnight on free areas is prohibited
Greece		X		X	Staying overnight for one night at designated areas on the national route Patras-Athens-Thessaloniki is permitted

Country	Sleeping on roads and fields		Sleeping on privately owned lands		Comments
	Yes	No	Yes	No	
Great Britain		X	X		
Ireland		X	X		
Italy	X		X		Staying overnight for one night at car parks and service stations is allowed. Observe the local regulations. Parking and staying overnight on free areas is prohibited
Croatia		X		X	
Luxembourg		X	X		
Macedonia		X		X	
Netherlands		X	X		Overnight stays on streets and squares is allowed in some boroughs
Norway	X		X		Officially prohibited on rest areas and cultivated grounds. Travelling on dirt roads is prohibited
Austria	X		X		Staying overnight for one night to restore driving ability is permitted, but not in nature reserves. Observe regional and local restrictions. Generally forbidden in Tyrol
Poland		X	X		Requires property owner's permission
Portugal		X		X	Staying overnight for one night on motorway service stations and car parks under 10 hours are tolerated
Romania		X		X	
Russia		X		X	
Sweden	X		X		Not on agriculture areas or in the vicinity of houses. Driving on open fields is prohibited
Switzerland		X	X		One overnight stay at highway rest areas and in some cantons is tolerated
Serbia and Montenegro		X		X	
Slovakia	X		X		Overnight stays on private land are only allowed if a toilet is present
Slovenia		X		X	
Spain	X		X		Some regional prohibitions apply, especially on beaches

Premio/Averso - 09/10 - Ausgabe 12/09 - 1865313 - BUE-0048-08EN

Country	Sleeping on roads and fields		Sleeping on privately owned lands		Comments
	Yes	No	Yes	No	
Czech Republic	X		X		Overnight stays on private land are only allowed if a toilet is present
Turkey	X		X		
Ukraine	X		X		
Hungary		X	X		Staying overnight on privately owned land is permitted only with police certification

Specifications without guarantee

17.6 Gas supply in European countries

▷ In Europe, there are several different connection systems for gas bottles. It is not always possible to fill or exchange your gas bottles in a foreign country. Get information about the connection system in the country you are travelling to before embarking on your journey, e.g. at a motoring club or in the trade press.

General tips Always observe the following instructions:

- Only go on vacation with completely filled gas bottles.
- Use all of the gas bottles' capacity.
- Take along adapter sets (available in camping supply stores) for filling gas bottles in foreign countries and for connecting the gas pressure regulator to foreign gas bottles.
- During the cold time of the year observe filling with propane gas component (butane does not gas below 0 °C).
- Use blue bottles from the firm Campingaz (distributed world-wide). Only use gas bottles with safety valves.
- When bottles from other countries are used, check the gas bottle compartments to see if the gas bottles fit into them. Gas bottles from other countries do not always display the same size as your own gas bottles.

17.7 Toll regulations in European countries

Many European countries have introduced a mandatory toll system. The toll regulations and how they are collected vary greatly from country to country. Nevertheless, ignorance is no excuse. Penalties can be quite severe.

As is the case with traffic regulations, the vehicle driver is required to be familiar with the toll formalities before starting out on a trip.

Contact your automobile club or the Internet for further information.

17.8 Tips on staying overnight safely during travel

Prudent behaviour is the most important protective measure for insuring a safe night in the caravan.

The risk of thievery is reduced to a minimum when the following basic rules are observed:

- Before commencing the journey, close and lock all windows, doors and skylights.
- During high season do not spend the night at highway rest stops or parking areas located along typical vacation routes.
- Several vehicles on one site at the same time do not necessarily decrease the chances of thievery occurring. Consult your own feelings about the parking site.
- Even if it is just for one night, go to a camping site.
- Only take with you those valuables which are absolutely necessary for the journey. If possible, store valuables in a small safe and not in the immediate vicinity of windows or doors.
- Always lock up the vehicle.

17.9 Tips for winter campers

The following tips will help make your winter camping experience as agreeable as possible.

- Reserve your parking place in good time. Good winter camping sites are often booked up early.
- Do not start your trip without winter tyres.
- Choose your parking place with care. Observe the ground beneath you. Snow and ice may melt.
- Place boards of a sufficient size under the jockey wheel and the corner steadies to prevent then from sinking when the snow thaws.
- When the vehicle has been positioned, release the handbrake to prevent freezing.
- Protect the handbrake lever and the accumulator against frost with protective covers.
- No snow walls should be allowed to cover the built-in forced ventilation.
- Protect the gas bottle compartment against freezing with a protective cover.
- Do not leave waste water in the tank but drain it into a bucket.
- Keep the built-in forced ventilation free from snow and ice.
- Make sure the air circulation is good. Good air circulation prevents moisture from collecting and makes it easier to heat the living area.
- Follow the instructions in the section "Gas supply in European countries".
- Use a two-bottle system with automatic controller for the gas system, so that the supply does not run out during the night.
- Only operate the gas system using propane gas.
- Do not use the space behind the heater as a storage compartment.
- Never operate catalytic ovens or infra-red gas radiators in the interior of the vehicle, since they consume oxygen for burning.
- Lay the 230 V power cable in such a way that the cable cannot be frozen or be damaged (e.g. during snow removal).
- Use a winter awning.
- When it is snowing heavily, clear the roof of the vehicle of snow regularly. A few centimetres of powdery snow serves as insulation, but wet snow quickly becomes a heavy burden.
- Before embarking on the return journey, remove all the snow from the roof to avoid impeding vehicles behind you with a "snow flag".

17.10 Travel checklists

The following checklists will help that nothing important is left at home although not everything on the checklists might be necessary.



▷ Do not leave checking of documents (e.g. vehicle papers and information) as well as checking the condition of the vehicle until just before commencing the trip. Planning and checking documents well in advance will save unnecessary trouble.

Kitchen area

✓	Object	✓	Object	✓	Object
	Wiping cloth		Cleansing agent (detergent)		Salad servers
	Mug		Dishcloths		Chopping board
	Turnspit		Set of knifes and forks for grilling		Bowls
	Can opener		Coffeepot		Brush to wash the dishes
	Egg-cup		Corkscrew		Cloth to wash the dishes
	Ice cube tray		Kitchen paper		Matches
	Lighter		Spoons		Cups
	Bottle opener		Knifes		Plates
	Air-tight storage boxes		Garbage bags		Thermos jug
	Breakfast plate		Frying pans		Pots
	Forks		Stirring spoons		Glasses

Bathroom/sanitary items

	Towels		Toilet brush		Toothbrush glass
	Sanitary items		Toilet paper		

Living area

	Dustbin		Insect lamp		Rain clothes
	Road atlas		Insect repellent		First aid kit
	Bath towels		Deck of cards		Travel guides/parking guide
	Bath shoes		Broom		Rucksack
	Batteries		Candles		Sleeping bags
	Bed sheets		Dust pan		Pencils and paper
	Bed linen		Coat-hangers		Shoes
	Laundry bag		Clothes brush		Shoe polish
	Books		Pillow		Vacuum cleaner
	Camping guide		Map		Flash light
	Spare bulbs		Medicine		Pocket knife
	Water bottle		Music cassettes		Table cloth
	Binoculars		Neck-supporting pillow		Clothes pins
	Fire extinguisher		Sewing kit		Clothesline
	Gas bottle		Radio		

Vehicle/tools

✓	Object	✓	Object	✓	Object
	Waste water container		Fabric tape		Screwdriver
	Adapter socket		Watering can for drinking water		Current-measuring instrument
	CEE adapter		Cable reel		Step
	Wire		V-belt		Wheel chocks
	Spare wheel		Glue		First-aid kit
	Spare lamps		Universal pliers		Vehicle jack
	Spare fuses		Compressor		Hazard warning triangle
	Replacement water pump		Luster terminals		Warning sign
	Hammer		Loops		Warning vest
	Flat wrench		Tube adapter		Flashing hazard warning light
	Gas filling adapter		Hose clips		
	Gas tube		Snow chains (winter)		

Outside

	Stay rope		Camping table		Lock
	Bellows		Luggage racks		String
	Camping chairs		Grill		Tent pegs/tightening ropes

Documents

	List of addresses		Registration book		Identity card
	Registration confirmation(s)		Driving licence		Passport
	Allergy certificate		Green insurance card		Writ of protection
	Instruction manuals		Vaccination certificate		Vignette/toll card
	Instruction leaflets for medicines		Credit card		Visa

Pos.	Component	Activity	Interval
1	Jockey wheel	Lubricate, check wheel rims for damage, visual check of the tyres, check threaded spindle and crank	Annually
2	Corner steadies	Lubrication	Annually
3	Joints, hinges and levers on the chassis	Lubrication	Annually
4	Underbody	Visual check, repair underbody protection as necessary	Annually
5	Chassis	Lubrication	Annually
6	Wheel attachment	Tighten the wheel nuts, check tyre bearings	Annually
7	Tyres and wheel rims	Air pressure check (see section 13.7). Visual check for damage, tread depth at least 2 mm	Annually
8	Brakes	Check and adjust if necessary	Annually
9	Outside lighting	Function check	Annually
10	Refrigerator, heater, kitchenette, storage flap locks, water system, interior electrics	Function check	Annually
11	Upholstery, curtains, blinds	Visual check	Annually
12	Windows, skylights	Function check, water ingress test	Annually
13	Sealing strips, edges, rubber	Check for damage	Annually
14	Brake lining	Lining thickness min. 4 mm	Every two years
15	Brake drums	Visual check for wear and rust, check spring tension	Every two years
16	Axle bearing	Check the slack	Every two years
17	Slotted nut on the wheel	Check position and dummy fuse	Every two years
18	Overrun brake	Function check	Every two years
19	Brake cable assembly	Visual check	Every two years
20	Chassis underbody	Check bolts are firmly secured	Every two years
21	Gas fittings	Official gas inspection	Every two years

Delivery _____ Pos. 1-13
Stamp of the Bürstner dealer
Date Signature

1st year _____ Pos. 1-13
Stamp of the Bürstner dealer
Date Signature

2nd year _____ Pos. 1-21
Stamp of the Bürstner dealer
Date Signature

3rd year _____ Pos. 1-13
Stamp of the Bürstner dealer
Date Signature

4th year _____ Pos. 1-21
Stamp of the Bürstner dealer
Date Signature

5th year _____ Pos. 1-13
Stamp of the Bürstner dealer
Date Signature

6th year _____ Pos. 1-21
Stamp of the Bürstner dealer
Date Signature

7th year _____ Pos. 1-13
Stamp of the Bürstner dealer
Date Signature

8th year _____ Pos. 1-21
Stamp of the Bürstner dealer
Date Signature

Premio/Averso - 09/10 - Ausgabe 12/09 - 1865313 - BUE-0048-08EN

12 V fuses 84
For the refrigerator 85
For Thetford toilet 85, 86
12 V power supply 81
12 V power supply, troubleshooting 173
230 V automatic circuit breaker 86
230 V connection 37, 83
External flap 46
Power cable 83
Troubleshooting 173
230 V fuse 86
230 V power supply 82

A

Accessories, fitting 12
Adapter cable 84
Adapter, thirteen-pin plug 86
Additional equipment 24
Add-on parts see special equipment 12
Air conditioning unit (Dometic)
Air current, adjusting 100
Care 144
LED 99
Maintenance 144
Operating modes 99
Switching off 99
Switching on 99
Troubleshooting 177
Air conditioning unit (Telair)
Care 144
Filter, cleaning 144
Operating modes 101
Switching off 101
Switching on 101
Troubleshooting 178
Ventilation grill, cleaning 144
Air outlet nozzles, adjustment 92
Airmix 95
Alloy wheel rims 166
Antenna alignment 38
Antenna, lowering for driving 38
Appliances 91
Manuals 12
Warranty cards 1
ATC (caravan control system) 21
Awning light 49
Axle load 26

B

Basic equipment 23
Bed widening, single beds 67
Beds 63
Before the journey 17
Bench and central seating group, sleeping conversion 69
Bike rack
Bicycles, loading 28
Load 27
On the front 28
On the rear wall 28
Travelling with a loaded bike rack 27
Blind, cleaning 142
Blind, Heki skylight
Closing 60
Opening 60
Blind, window
Closing 56
Opening 56
Blind, window of conversion door
Closing 43
Opening 43
Boiler (Truma) 102
230 V electrical operation 103
Combined operation 103
Emptying 104
Gas operation 102
Operating modes 102
Troubleshooting 175
Water, filling with 103
Brakes 33
Check 33, 171
Maintenance 151
Braking system, troubleshooting 171
Breakaway brake cable 18
Breakdown services in Europe 185
Bulbs, changing 151, 154
Ceiling lamp 154
Cooker lamp 158
Exterior lighting 151
Front lights 152
Halogen spotlight 156, 157
Interior lighting 154
Light rope 159
Rear lights 153
Recessed halogen light 155, 156
Types of bulbs, exterior 154

Bunk bed 63
Butane gas 14, 74

C

Cable reel 83
Camping gas bottles, use 15, 74
Camping in winter 192
Cap for the drinking water filler neck 47
Capacity of the battery 81
Caravan
  Correct loading 25
  Pitching 35
Caravan control system (ATC) 21
  Troubleshooting 172
Caravan coupling 18, 19
  AK 300/160 19
Caravan load 22, 26
Care 139
  Air conditioning unit (Telair) 144
  Blind 142
  Carpet 141
  Curtains 141
  External care 139
  Extractor hood 144
  Furniture surfaces 141
  Gas cooker 142
  High-pressure cleaner, washing with 139
  In the winter 145
  Insect screen 142
  Interior care 141
  Lamps 141
  Leather covers 141
  Net curtains 141
  PVC-floor covering 141
  Roman shade 142
  Sink 142
  Synthetic parts, interior 141
  Temporary lay-up 146
  Underbody 140
  Upholstery 141
  Washing 139
  Waste water tank 141
  Water system 142
  Windows 140
  Winter lay-up 147
Carpet, cleaning 141
Ceiling lamp 154
Changing wheels 163
  Tightening torque 164, 166
  With alloy wheel rims 166
Chassis number 160
Chassis, troubleshooting 171
Checklist 30, 146
  Before the journey 30
  For the journey 192
  Initial start-up after temporary lay-up 148
  Road safety 30
  Temporary lay-up 146
  Winter lay-up 147
Children's beds 63, 65
Circuit diagram
  Exterior 90
  Interior 89
Circulation fan 94
Cleaning
  Water pipes 142
  Water tank 142
Cleaning see care 139
Condensation 52
  On the double acrylic glass pane 53
  On the screwed connections in the floor 52
Condensation water see condensation 53
Connecting 18
Connecting cable see power cable 83
Connection diagram, thirteen-pin plug 86
Connection to the towing vehicle 86
  Connection diagram 86
Conversion door 39, 42
  Blind, closing 43
  Blind, opening 43
  Insect screen, closing 43
  Insect screen, opening 43
  Splitting 40
  Window, closing 42
  Window, opening 42
  Windows, continuous ventilation 42
Conversion door, inside
  Locking 40, 41
  Opening 40, 41
Conversion door, outside
  Locking 39, 41
  Opening 39, 41
Cooker 105
  Troubleshooting 174
Cooker lamp 158

Corner steadies 35
Cranking down 36
Cranking up 36
Curtains, cleaning 141

D

Danger of suffocation 12, 52
Detaching 22
Dimensions see table of linear measures 183
Disposal
Household waste 8
Sewage 8
Waste water 8
Door lock 39, 41
Doors
Conversion door 39
Lock 39, 41
Maintenance work 151
Troubleshooting 180
Drinking water 16
Driving in reverse 33
Driving with the caravan 33
DuoControl switching facility 77
During the journey 33

E

Electrical system 81
230 V connection, troubleshooting 173
Explanation of terms 81
Lighting, troubleshooting 173
Safety instructions 15
Troubleshooting 173
Entrance step 36
Environmental tips 8
Exterior lighting
Bulbs, changing 151
Types of bulbs 154
External care 139
External connection see 230 V connection 37
External flaps 44
Flap lock 44, 46
External gas connection 76
External mirrors 13, 29
External socket 88
Extractor hood 109
Care 144
Filter, cleaning 144
Troubleshooting 173

F

Fault current protection switch 83
Fire
Behaviour in the event of 11
Extinguishing 11
Fire prevention 11
Fire risks, avoidance 11
Fixed bed 63, 64
Closing 64
Opening 64
Flap lock
Closing 45, 46, 47
Elliptical-shaped 44
Flap for toilet cassette 46
Opening 44, 45, 46, 47
Rectangular 45
Flat screen with holder 51
Positioning 51, 52
Storing 51, 52
Floor warming unit, electrical
Overload protection 98
Switching off 98
Switching on 98
Forced ventilation 12, 52
Freezer compartment door locking mechanism
Closing 117
Locking in the ventilation position 118
Opening 117
Furniture flaps 47
Closing 48
Opening 47, 48
Furniture flaps, troubleshooting 180
Furniture surfaces, cleaning 141
Fuses
12 V fuses 84
230 V fuse 82, 86
For the Thetford toilet 85, 86
On the power supply unit 85
Fuses see 12 V fuses and 230 V fuse 84

G

Gas alarm system 78
Gas bottle compartment 14, 15, 74
Gas bottles
Changing 75
Safety instructions 15, 74
Gas connection, external 76

Gas cooker
Cleaning 142
Switching off 107
Switching on 106
Troubleshooting 174
Gas isolator taps 76
Symbols 76, 91
Gas odour 14, 73, 174
Gas oven 107
Switching off 108
Switching on 107
Troubleshooting 174
Gas supply in European countries 191
Gas system 73
Defect 14, 73, 174
General instructions 14
Safety instructions 14, 73
Switching automatics 77
Troubleshooting 174
Gas tube, check 14, 74
General instructions 8

H

Halogen spotlight 156, 157
Hand crank, corner steadies 36
Handbrake 35
Applying 12, 35
Releasing 35
Handling of tyres 163
Heat exchangers, heater, replacement 91
Heater 92
Air outlet nozzles, adjustment 92
Battery on the automatic ignition, changing 94
Circulation fan 94
Heat exchangers, replacement 91
Hot air distribution 92
Initial start-up 92
Switching off 93
Switching on 93
Troubleshooting 175
Heater automatic ignition, changing the battery 94
Heating 52
Heating mode 52
Heki skylight 58, 59
Blind 60
Closing 58, 59
Insect screen 59, 60
Opening 58, 59
Roman shade 58
Ventilation position 58, 59, 60
Help on Europe's roads 185
High rate of gas consumption 14, 73, 174
High-pressure cleaner, washing with 139
Hinged window 55
Blind 56
Closing 54, 55
Continuous ventilation 54, 55
Insect screen 56
Opening 54, 55
Hitching device Easy-Pull 20
Maintenance work 151
Hot air distribution 92
Hot galvanized chassis 140
Hot water source 104
Emptying 105
Switching off 105
Switching on 105
Troubleshooting 176
Water, filling with 105
Hot-air heater
Battery on the automatic ignition, changing 94
Circulation fan 94
Switching off 93
Switching on 93
Troubleshooting 175

I

Information stickers 160
Initial start-up
After temporary lay-up 148
After winter lay-up 148
Inner door, troubleshooting 180
Inner doors 47
Insect screen door
Closing 44
Opening 44
Insect screen, cleaning 142
Insect screen, conversion door
Closing 43
Opening 43
Insect screen, Heki skylight
Closing 59, 60
Opening 59, 60

Insect screen, window of conversion door
Closing 43
Opening 43
Insect screen, windows
Closing 56
Opening 57
Inspection plan 195
Inspection work 149
Inspections 149
Installation diagram 86
Thirteen pin socket 87
Interior care 141
Interior lighting
Bulbs, changing 154
Troubleshooting 173

K

Keys 17

L

Lamps 154
Cleaning 141
Lay-up
Temporary 146
Winter lay-up 147
Leakage water inside the vehicle 178
Leather covers, cleaning 141
Lift-off table
Conversion to bed foundation 63
Table-top, moving 63
Light metal wheel rims
see alloy wheel rims 166
Light rope 159
Light switch
Living area 50
Toilet compartment 49
Lighting
Front 152
Lamps, cleaning 141
Rear 153
Troubleshooting 173
Load 25
Bike rack 27
Load see also payload 25
Lock
Conversion door 39, 41
External flap 44, 46
Furniture flap 47
Low beam 189

M

Maintenance 149
Maintenance work 149
Air conditioning unit (Dometic) 144
Air conditioning unit (Telair) 144
AKS 1300 150
AKS 3004 150
Braking system 151
Doors 151
Hitching device Easy-Pull 151
Marker light 153
Mass in ready-to-drive condition 23, 25
Maximum permissible gross weight 23, 25
Maximum permissible speed 187
Maximum speed, technically permissible 187
Microwave oven
Switching off 108
Switching on 108
Troubleshooting 175
Minimum nose weight 22

N

Net curtains, cleaning 141
No gas 174
Nose weight 18, 22, 26

O

Operating modes
Air conditioning unit (Dometic) 99
Air conditioning unit (Telair) 101
Boiler (Truma) 102
Refrigerator 109, 111, 113, 115
Switching automatics, gas system 78
Oven see gas cooker or gas oven 106, 107
Overrun brake 18

P

Payload 22
Calculation 24
Composition 23
Example calculation 23, 25
Payload see also load 22
People in the caravan 13, 33
Permissible gross weight
see maximum permissible gross weight 22
Personal equipment 24
Power cable for the 230 V connection 83
Power supply 183

Power supply unit CSV 300
Functions 82
Position 82
Propane gas 14, 74
Pull-down bed
Closing 65
Opening 65
Retaining belts, tightening 65
Pull-down bed, electrically operated 65
Closing 66
Emergency operation 67
Making ready for operation 66
Opening 66
Overload protection 66
Retaining belts, tightening 66
PVC-floor covering, cleaning 141

R

Rear axle load 18
Recessed halogen light 155, 156
Refrigerator 37, 109
12 V operation,
switching on/off 111, 112, 114, 116
230 V operation,
switching on/off 111, 112, 114, 116
Door lock 116, 117
Frame heater 114
Fuse 85
Gas operation,
switching off 110, 112, 114, 115
Gas operation,
switching on 110, 112, 113, 115
Operating modes 109, 111, 113, 115
Troubleshooting 176
Ventilation grill, removal 109
Volume 113
Refrigerator door locking mechanism
Closing 117, 118
Locking in the ventilation position . . . 117, 118
Opening 117, 118
Refrigerator ventilation grill, removal 109
Registration 17
Risk of frost damage 16, 119, 123
Road safety 30
Checklist 30
Notes for 12
Roman shade, cleaning 142
Roman shade, Heki skylight
Closing 58
Opening 59
Round seating group, conversion 62
Round seating group,
sleeping conversion 70, 71

S

Safety cut-out 86
Safety instructions 11
Changing wheels 163
Cooker 105
Electrical system 15
Fire prevention 11
Gas bottles 74
Gas system 14, 73
Road safety 12
Towing 13
Water system 16
Safety net, pull-down bed 65
Safety net, pull-down bed,
electrically operated 66
Sanitary fittings 119
SAT socket 88
Satellite unit 37, 38
With automatic antenna alignment 38
With semi-automatic antenna alignment 38
Seating groups, sleeping conversion 68
Shower 124
Side marker light 153
Single beds, bed widening 67
Sink, cleaning 142
Skylights 57
Sleeping conversion
Bench and central seating group 68, 69
Round seating group 70, 71
Widening single beds 67
Widening the bed into a laying area 72
Sockets
External socket 88
SAT socket 88
TV socket 88
Spare parts 159
Spare wheel 166
Spare wheel support 166
Special equipment 181
Description 7
Marking 7
Safety instructions 12
Weight details 181
Speed limits 187

Spotlight 50
Removing 50
Shifting 50
Turning 50
Stabiliser
AKS 1300 19
AKS 1300, maintenance work 150
AKS 3004 20
AKS 3004, maintenance work 150
Stabiliser see also caravan coupling 19, 149
Stabilising lever 18
Staying overnight
Away from camping areas 189
During travel 191
Supports see corner steadies 35
Suspension table 61, 62
Conversion to bed foundation 61
Conversion to round seating group 62
Switching automatics, gas system 77
Swivel table 61, 62
Conversion to bed foundation 62
Conversion to round seating group 62
Symbols
For instructions 7
Gas isolator taps 76, 91
Synthetic parts in the toilet and living areas, cleaning 141

T

Table of linear measures 183
Tables 61
Technical data
Dimensions 183
Power supply 183
Television 29
Thermal cut-out 82
Thetford cassette 125, 129, 132, 135
Emptying 129, 135
Removing 131
Retaining clip 125, 129, 132, 135
Thetford toilet 124
Emptying 129, 135
Fuse 85, 86
Preparing 125, 132
Swiveling 125
Troubleshooting 178
Using 127, 134
Water tank, emptying 136
Water tank, filling 131
With fixed seat 131
Thirteen-pin plug, connection diagram 86
Tightening torque, wheels 164, 166
Tips 185
Toilet compartment 124
Light switch 49
Ventilation 124
Toilet see also Thetford toilet 124
Toll regulations in European countries 191
Towing 13
Safety instructions 13
Traffic rules in foreign countries 185
Travel checklists 192
Travel cots suitable for children 63, 65
Troubleshooting 171
12 V power supply 173
230 V connection 173
Air conditioning unit (Dometic) 177
Air conditioning unit (Telair) 178
Body 180
Boiler (Truma) 175
Braking system 171
Caravan control system (ATC) 172
Chassis 171
Cooker 174
Electrical system 173
Extractor hood 173
Furniture flaps 180
Gas cooker 174
Gas oven 174
Gas system 174
Heater 175
Hot water source 176
Hot-air heater 175
Inner door 180
Interior lighting 173
Lighting 173
Microwave oven 175
Refrigerator 176
Thetford toilet 178
Water supply 178
TV socket 88
Tyre change see changing wheels 163
Tyre specifications 163
Tyres 161
Excessive wear 13, 30, 161, 167
General instructions 161
Handling 163

Identification 163
Load-carrying capacity 164
Tyre pressure 167
Tyre selection 162

U

Ultraheat additional electric heater 96
Switching off 96
Switching on 96
Underbody, maintenance 140
Upholstery, cleaning 141

V

Vehicle identification plate 160
Vehicle jack 7, 165
Vehicle lighting see exterior lighting 151
Vehicle, washing 139
Ventilation 52
Toilet compartment 124

W

Warning stickers 160
Warranty cards 1
Washing with a high-pressure cleaner 139
Waste gas vent on the right hand side of the vehicle. 102
Waste gas vent, cap 102
Waste water tank 37, 122
Care 141
Cleaning 141
Emptying 122
Water pipes, cleaning 142
Water pump 119, 122
Water supply
General 119
Troubleshooting 178
Water system
Care 142
Cleaning 142
Disinfect 143
Emptying 123
Filling 122
Safety instructions 16
Water tank 120
Cleaning 142
Emptying 120, 121
Filling 120, 121
Water, removing 120, 121
Water tank 16 l 120
Water tank 22 l 120
Water tank 40 l 121
Weight details for special equipment 181
Wheel chocks 35
Wheel rim size 164
Wheel rim type 161
Wheels 161
Widening the bed into a laying area 72
Window, conversion door
Blind, closing 43
Blind, opening 43
Closing 42
Continuous ventilation 42
Insect screen, closing 43
Insect screen, opening 43
Opening 42
Windows 53
Blind 56
Cleaning 140
Insect screen 56
Winter care 145
Winter operation 145

Premio/Averso - 09/10 - Ausgabe 12/09 - 1865313 - BUE-0048-08EN